MAC97 Series

Preferred Device

Sensitive Gate Triacs

Silicon Bidirectional Thyristors

Designed for use in solid state relays, MPU interface, TTL logic and any other light industrial or consumer application. Supplied in an inexpensive TO–92 package which is readily adaptable for use in automatic insertion equipment.

- One–Piece, Injection–Molded Package
- Blocking Voltage to 600 Volts
- Sensitive Gate Triggering in Four Trigger Modes (Quadrants) for all possible Combinations of Trigger Sources, and especially for Circuits that Source Gate Drives
- All Diffused and Glassivated Junctions for Maximum Uniformity of Parameters and Reliability
- Device Marking: Logo, Device Type, e.g., MAC97A4, Date Code

MAXIMUM RATINGS (T_J = 25°C unless otherwise noted)

Rating	Symbol	Value	Unit
Peak Repetitive Off-State Voltage (T_J = –40 to +110°C)(1) Sine Wave 50 to 60 Hz, Gate Open	V_{DRM}, V_{RRM}		Volts
MAC97A4		200	
MAC97A6		400	
MAC97–8, MAC97A8		600	
On-State RMS Current Full Cycle Sine Wave 50 to 60 Hz (T_C = +50°C)	$I_{T(RMS)}$	0.6	Amp
Peak Non–Repetitive Surge Current One Full Cycle, Sine Wave 60 Hz (T_C = 110°C)	I_{TSM}	8.0	Amps
Circuit Fusing Considerations (t = 8.3 ms)	I^2t	0.26	A^2s
Peak Gate Voltage (t ≤ 2.0 μs, T_C = +80°C)	V_{GM}	5.0	Volts
Peak Gate Power (t ≤ 2.0 μs, T_C = +80°C)	P_{GM}	5.0	Watts
Average Gate Power (T_C = 80°C, t ≤ 8.3 ms)	$P_{G(AV)}$	0.1	Watt
Peak Gate Current (t ≤ 2.0 μs, T_C = +80°C)	I_{GM}	1.0	Amp
Operating Junction Temperature Range	T_J	–40 to +110	°C
Storage Temperature Range	T_{stg}	–40 to +150	°C

(1) V_{DRM} and V_{RRM} for all types can be applied on a continuous basis. Blocking voltages shall not be tested with a constant current source such that the voltage ratings of the devices are exceeded.

ON Semiconductor

http://onsemi.com

TRIACS
0.8 AMPERE RMS
200 thru 600 VOLTS

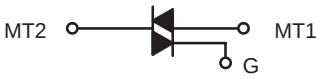

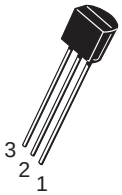

TO–92 (TO–226AA)
CASE 029
STYLE 12

PIN ASSIGNMENT	
1	Main Terminal 1
2	Gate
3	Main Terminal 2

ORDERING INFORMATION

See detailed ordering and shipping information in the package dimensions section on page 8 of this data sheet.

Preferred devices are recommended choices for future use and best overall value.

February, 2000 – Rev. 4

Publication Order Number:
MAC97/D

THERMAL CHARACTERISTICS

Characteristic	Symbol	Max	Unit
Thermal Resistance, Junction to Case	$R_{\theta JC}$	75	°C/W
Thermal Resistance, Junction to Ambient	$R_{\theta JA}$	200	°C/W
Maximum Lead Temperature for Soldering Purposes for 10 Seconds	T_L	260	°C

ELECTRICAL CHARACTERISTICS (T_C = 25°C unless otherwise noted; Electricals apply in both directions)

Characteristic	Symbol	Min	Typ	Max	Unit
OFF CHARACTERISTICS					
Peak Repetitive Blocking Current (V_D = Rated V_{DRM}, V_{RRM}; Gate Open) T_J = 25°C	I_{DRM}, I_{RRM}	—	—	10	µA
T_J = +110°C		—	—	100	µA
ON CHARACTERISTICS					
Peak On–State Voltage (I_{TM} = ±.85 A Peak; Pulse Width ≤ 2.0 ms, Duty Cycle ≤ 2.0%)	V_{TM}	—	—	1.9	Volts
Gate Trigger Current (Continuous dc) (V_D = 12 Vdc, R_L = 100 Ohms)	I_{GT}				mA
MT2(+), G(+) MAC97–8 Device		—	—	10	
MT2(+), G(–)		—	—	10	
MT2(–), G(–)		—	—	10	
MT2(–), G(+)		—	—	10	
MT2(+), G(+) MAC97A4,A6,A8 Devices		—	—	5.0	
MT2(+), G(–)		—	—	5.0	
MT2(–), G(–)		—	—	5.0	
MT2(–), G(+)		—	—	7.0	
Gate Trigger Voltage (Continuous dc) (V_D = 12 Vdc, R_L = 100 Ohms)	V_{GT}				Volts
MT2(+), G(+) All Types		—	.66	2.0	
MT2(+), G(–) All Types		—	.77	2.0	
MT2(–), G(–) All Types		—	.84	2.0	
MT2(–), G(+) All Types		—	.88	2.5	
Gate Non–Trigger Voltage (V_D = 12 V, R_L = 100 Ohms, T_J = 110°C) All Four Quadrants	V_{GD}	0.1	—	—	Volts
Holding Current (V_D = 12 Vdc, Initiating Current = 200 mA, Gate Open)	I_H	—	1.5	10	mA
Turn-On Time (V_D = Rated V_{DRM}, I_{TM} = 1.0 A pk, I_G = 25 mA)	t_{gt}	—	2.0	—	µs
DYNAMIC CHARACTERISTICS					
Critical Rate–of–Rise of Commutation Voltage (V_D = Rated V_{DRM}, I_{TM} = .84 A, Commutating di/dt = .3 A/ms, Gate Unenergized, T_C = 50°C)	dv/dt(c)	—	5.0	—	V/µs
Critical Rate of Rise of Off–State Voltage (V_D = Rated V_{DRM}, T_C = 110°C, Gate Open, Exponential Waveform	dv/dt	—	25	—	V/µs

Voltage Current Characteristic of Triacs (Bidirectional Device)

Symbol	Parameter
V_{DRM}	Peak Repetitive Forward Off State Voltage
I_{DRM}	Peak Forward Blocking Current
V_{RRM}	Peak Repetitive Reverse Off State Voltage
I_{RRM}	Peak Reverse Blocking Current
V_{TM}	Maximum On State Voltage
I_H	Holding Current

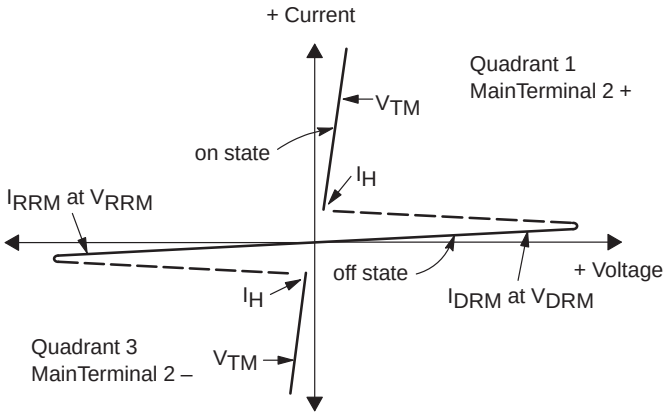

Quadrant Definitions for a Triac

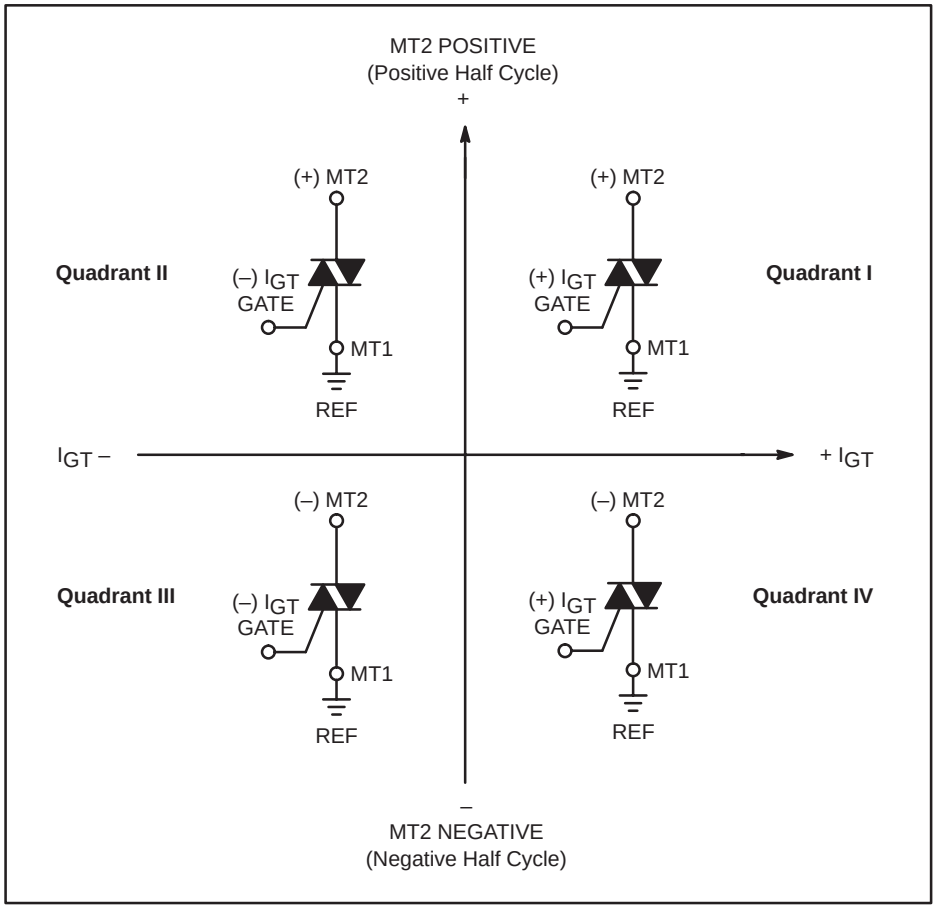

All polarities are referenced to MT1.
With in–phase signals (using standard AC lines) quadrants I and III are used.

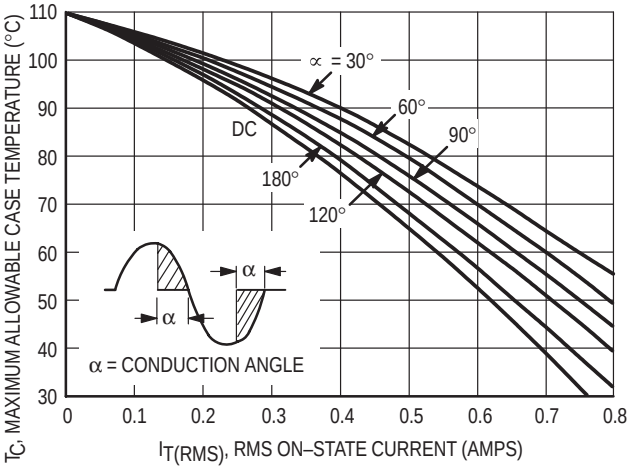

Figure 1. RMS Current Derating

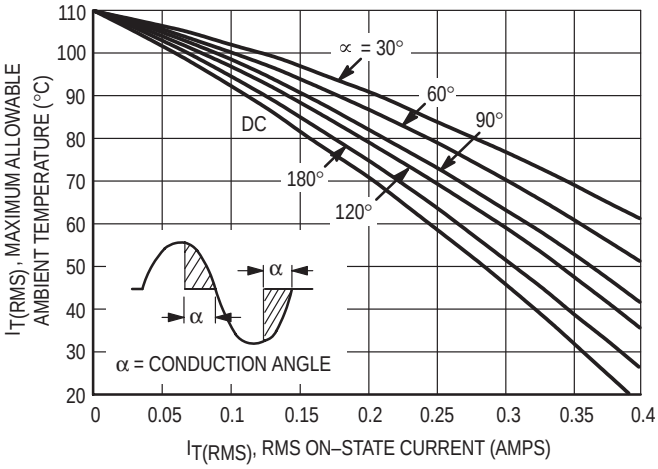

Figure 2. RMS Current Derating

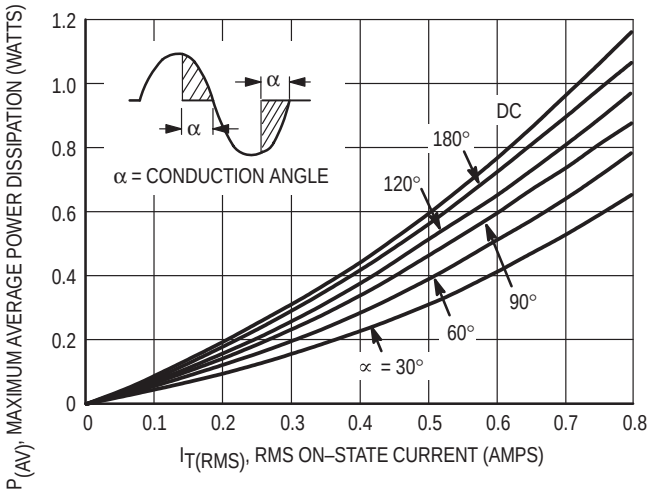

Figure 3. Power Dissipation

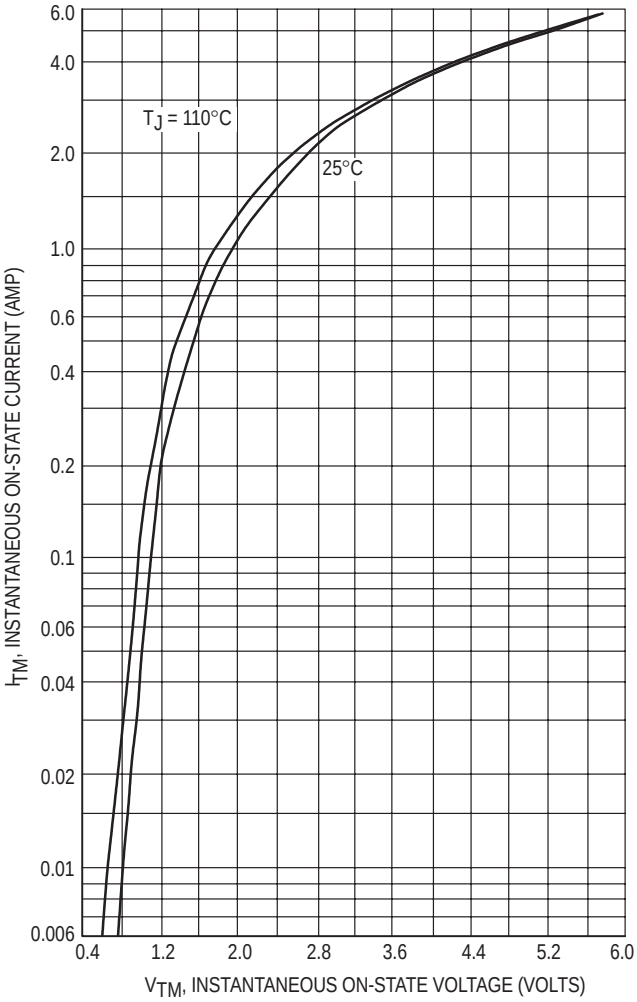

Figure 4. On–State Characteristics

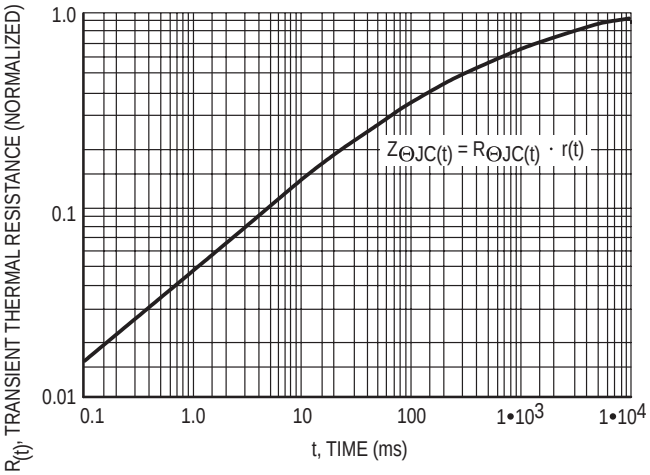

Figure 5. Transient Thermal Response

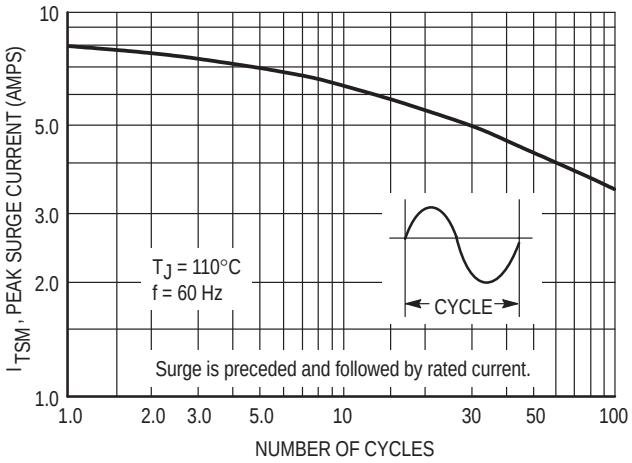

Figure 6. Maximum Allowable Surge Current

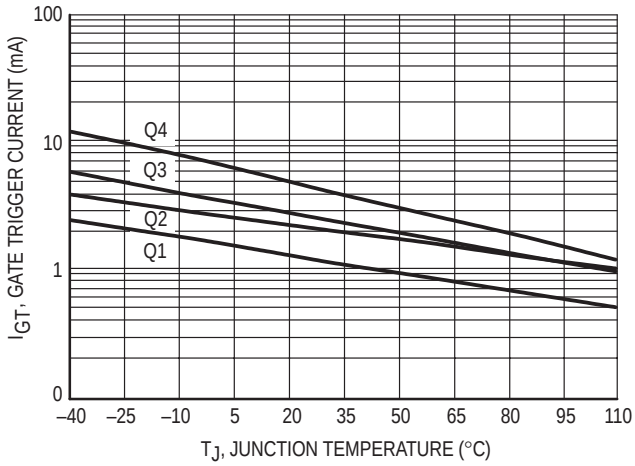

Figure 7. Typical Gate Trigger Current versus Junction Temperature

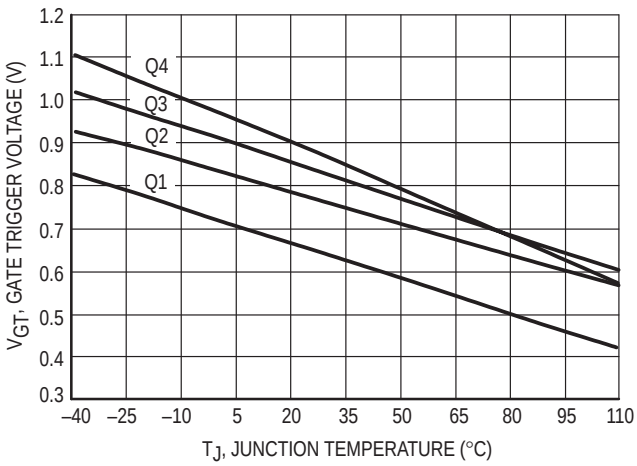

Figure 8. Typical Gate Trigger Voltage versus Junction Temperature

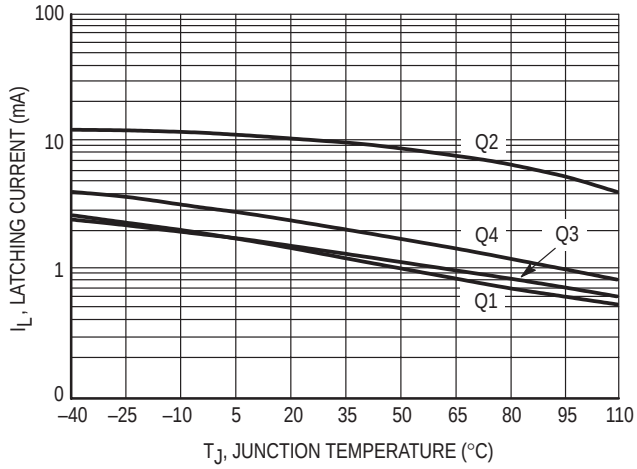

Figure 9. Typical Latching Current versus Junction Temperature

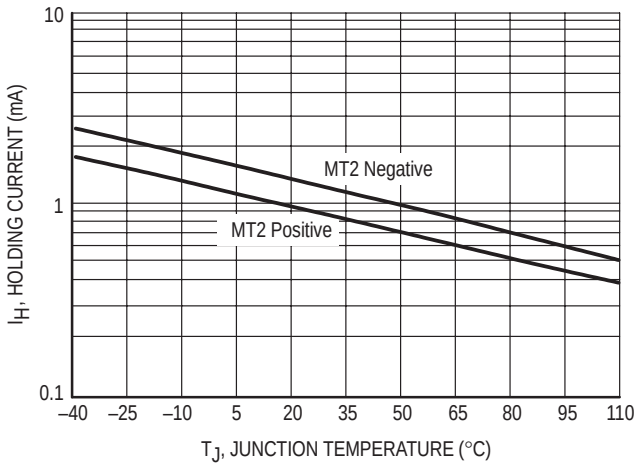

Figure 10. Typical Holding Current versus Junction Temperature

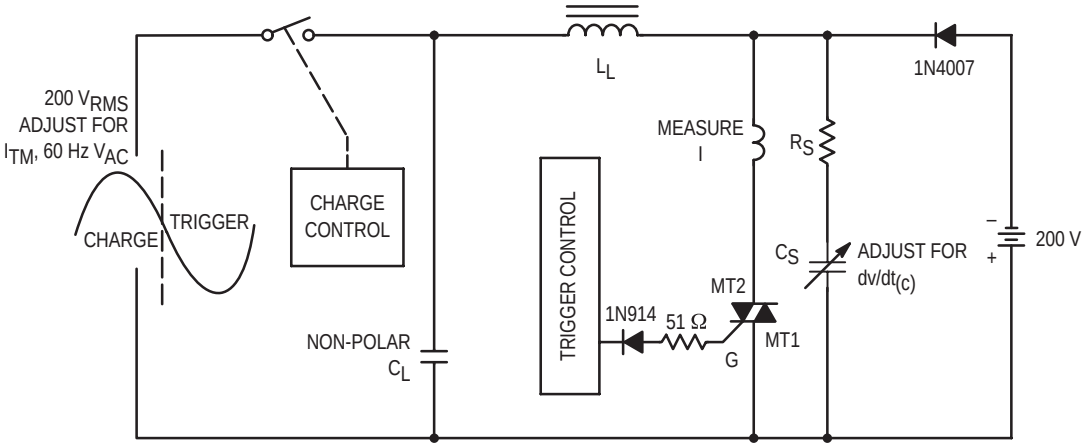

Note: Component values are for verification of rated $(dv/dt)_c$. See AN1048 for additional information.

Figure 11. Simplified Test Circuit to Measure the Critical Rate of Rise of Commutating Voltage $(dv/dt)_c$

TO–92 EIA RADIAL TAPE IN FAN FOLD BOX OR ON REEL

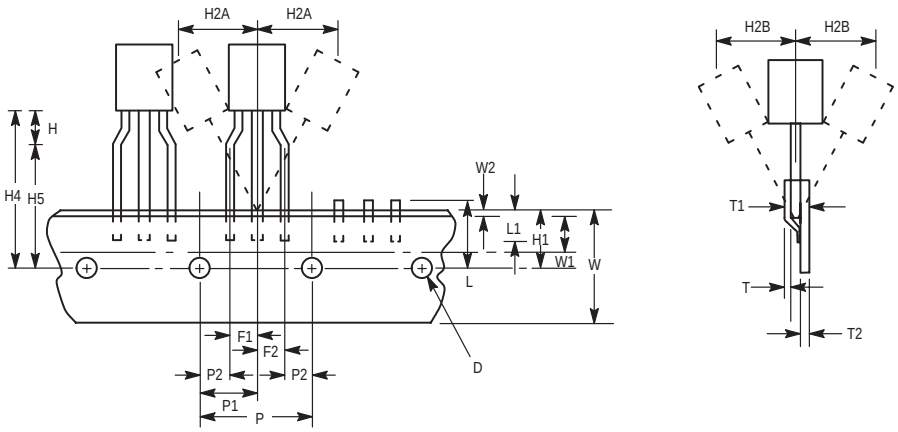

Figure 12. Device Positioning on Tape

Symbol	Item	Specification			
		Inches		Millimeter	
		Min	Max	Min	Max
D	Tape Feedhole Diameter	0.1496	0.1653	3.8	4.2
D2	Component Lead Thickness Dimension	0.015	0.020	0.38	0.51
F1, F2	Component Lead Pitch	0.0945	0.110	2.4	2.8
H	Bottom of Component to Seating Plane	.059	.156	1.5	4.0
H1	Feedhole Location	0.3346	0.3741	8.5	9.5
H2A	Deflection Left or Right	0	0.039	0	1.0
H2B	Deflection Front or Rear	0	0.051	0	1.0
H4	Feedhole to Bottom of Component	0.7086	0.768	18	19.5
H5	Feedhole to Seating Plane	0.610	0.649	15.5	16.5
L	Defective Unit Clipped Dimension	0.3346	0.433	8.5	11
L1	Lead Wire Enclosure	0.09842	—	2.5	—
P	Feedhole Pitch	0.4921	0.5079	12.5	12.9
P1	Feedhole Center to Center Lead	0.2342	0.2658	5.95	6.75
P2	First Lead Spacing Dimension	0.1397	0.1556	3.55	3.95
T	Adhesive Tape Thickness	0.06	0.08	0.15	0.20
T1	Overall Taped Package Thickness	—	0.0567	—	1.44
T2	Carrier Strip Thickness	0.014	0.027	0.35	0.65
W	Carrier Strip Width	0.6889	0.7481	17.5	19
W1	Adhesive Tape Width	0.2165	0.2841	5.5	6.3
W2	Adhesive Tape Position	.0059	0.01968	.15	0.5

NOTES:
1. Maximum alignment deviation between leads not to be greater than 0.2 mm.
2. Defective components shall be clipped from the carrier tape such that the remaining protrusion (L) does not exceed a maximum of 11 mm.
3. Component lead to tape adhesion must meet the pull test requirements.
4. Maximum non–cumulative variation between tape feed holes shall not exceed 1 mm in 20 pitches.
5. Holddown tape not to extend beyond the edge(s) of carrier tape and there shall be no exposure of adhesive.
6. No more than 1 consecutive missing component is permitted.
7. A tape trailer and leader, having at least three feed holes is required before the first and after the last component.
8. Splices will not interfere with the sprocket feed holes.

ORDERING & SHIPPING INFORMATION: MAC97 Series packaging options, Device Suffix

U.S.	Europe Equivalent	Shipping	Description of TO92 Tape Orientation
	MAC97A6RL1, A8RL1	Radial Tape and Reel (2K/Reel)	Flat side of TO92 and adhesive tape visible
MAC97–8, MAC97A4,A6,A8		Bulk in Box (5K/Box)	N/A, Bulk
MAC97A6RLRF		Radial Tape and Reel (2K/Reel)	Round side of TO92 and adhesive tape on reverse side
MAC97A–8RLRP, MAC97A6RLRP, A8RLRP		Radial Tape and Fan Fold Box (2K/Box)	Round side of TO92 and adhesive tape visible
MAC97A–8RLRM		Radial Tape and Fan Fold Box (2K/Box)	Flat side of TO92 and adhesive tape visible

PACKAGE DIMENSIONS

TO–92 (TO–226AA)
CASE 029–11
ISSUE AJ

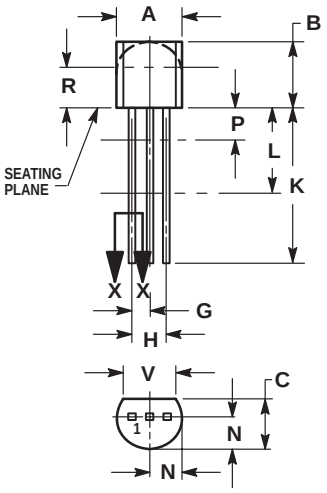

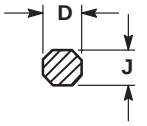

SECTION X–X

NOTES:
1. DIMENSIONING AND TOLERANCING PER ANSI Y14.5M, 1982.
2. CONTROLLING DIMENSION: INCH.
3. CONTOUR OF PACKAGE BEYOND DIMENSION R IS UNCONTROLLED.
4. LEAD DIMENSION IS UNCONTROLLED IN P AND BEYOND DIMENSION K MINIMUM.

	INCHES		MILLIMETERS	
DIM	MIN	MAX	MIN	MAX
A	0.175	0.205	4.45	5.20
B	0.170	0.210	4.32	5.33
C	0.125	0.165	3.18	4.19
D	0.016	0.021	0.407	0.533
G	0.045	0.055	1.15	1.39
H	0.095	0.105	2.42	2.66
J	0.015	0.020	0.39	0.50
K	0.500	—	12.70	—
L	0.250	—	6.35	—
N	0.080	0.105	2.04	2.66
P	—	0.100	—	2.54
R	0.115	—	2.93	—
V	0.135	—	3.43	—

STYLE 12:
PIN 1. MAIN TERMINAL 1
2. GATE
3. MAIN TERMINAL 2

Notes

Notes

PUBLICATION ORDERING INFORMATION

NORTH AMERICA Literature Fulfillment:
Literature Distribution Center for ON Semiconductor
P.O. Box 5163, Denver, Colorado 80217 USA
Phone: 303–675–2175 or 800–344–3860 Toll Free USA/Canada
Fax: 303–675–2176 or 800–344–3867 Toll Free USA/Canada
Email: ONlit@hibbertco.com
Fax Response Line: 303–675–2167 or 800–344–3810 Toll Free USA/Canada

N. American Technical Support: 800–282–9855 Toll Free USA/Canada

EUROPE: LDC for ON Semiconductor – European Support
German Phone: (+1) 303–308–7140 (M–F 1:00pm to 5:00pm Munich Time)
Email: ONlit–german@hibbertco.com
French Phone: (+1) 303–308–7141 (M–F 1:00pm to 5:00pm Toulouse Time)
Email: ONlit–french@hibbertco.com
English Phone: (+1) 303–308–7142 (M–F 12:00pm to 5:00pm UK Time)
Email: ONlit@hibbertco.com

EUROPEAN TOLL–FREE ACCESS*: 00–800–4422–3781
*Available from Germany, France, Italy, England, Ireland

CENTRAL/SOUTH AMERICA:
Spanish Phone: 303–308–7143 (Mon–Fri 8:00am to 5:00pm MST)
Email: ONlit–spanish@hibbertco.com

ASIA/PACIFIC: LDC for ON Semiconductor – Asia Support
Phone: 303–675–2121 (Tue–Fri 9:00am to 1:00pm, Hong Kong Time)
Toll Free from Hong Kong & Singapore:
001–800–4422–3781
Email: ONlit–asia@hibbertco.com

JAPAN: ON Semiconductor, Japan Customer Focus Center
4–32–1 Nishi–Gotanda, Shinagawa–ku, Tokyo, Japan 141–8549
Phone: 81–3–5740–2745
Email: r14525@onsemi.com

ON Semiconductor Website: http://onsemi.com

For additional information, please contact your local Sales Representative.