# TC2002A(L)

**TINSHARP ELECTRONICS CO.LTD**

## EXTERNAL DIMENSIONS AND DISPLAY PATTERN

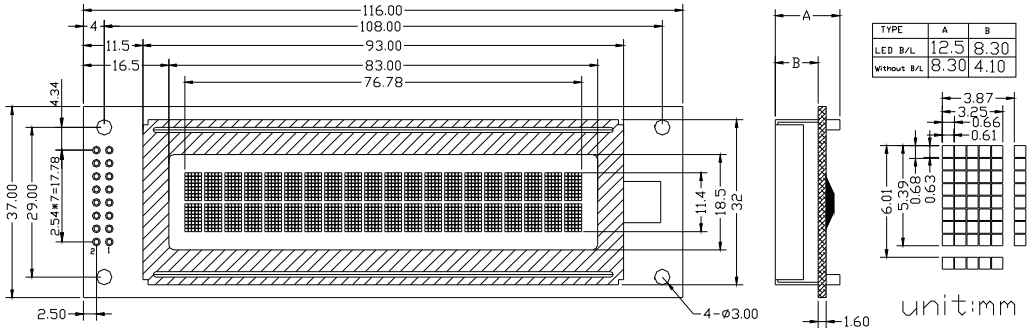


| TYPE | A | B |
|---|---|---|
| LED B/L | 12.5 | 8.30 |
| Without B/L | 8.30 | 4.10 |

## MECHANICAL DATA (Nominal dimensions)

| ITEM | SPECFICATION | UNIT |
|---|---|---|
| Module Size( WxH ) | 116.0x37.0 | mm |
| Viewing Area( WxH ) | 83.0x18.5 | mm |
| Internel Area( WxH ) | 76.78X11.40 | mm |
| Dot pitch( WxH ) | 0.66x0.68 | mm |
| Dot Size(WxH ) | 0.61x0.63 | mm |
| Character Pitch( WxH ) | 3.87x6.01 | mm |
| Character Size( WxH ) | 3.25x5.39 | mm |
| Number of character | 20characterx2line | char |

## PIN CONFIGURATION

| ITEM | SYMBOL | DESCRIPTION |
|---|---|---|
| 1 | VSS | Ground |
| 2 | VDD | Power supply for logic and LCD |
| 3 | V0 | Operating voltage for LCD |
| 4 | RS | Register select |
| 5 | R/W | Read/Write Select |
| 6 | E | Read/Write Enable |
| 7-14 | DB0-DB7 | Data Bus |
| 15 | K | Cathode of LED |
| 16 | A | Anode of LED |

## ELECTRICAL CHARACTERISTICS

| Item | Symbol | Test Condition | Standard value | | | Unit |
|---|---|---|---|---|---|---|
| | | | min. | typ. | max. | |
| Supply Voltage for Logic | $V_{DD}-V_{SS}$ | - | 4.5 | 5.0 | 5.5 | V |
| Supply Voltage for LCD | $V_{DD}-V_0$ | - | 0 | - | 5.0 | V |
| Input high Voltage | $V_{IH}$ | - | 2.2 | - | $V_{DD}$ | V |
| Input low Voltage | $V_{IL}$ | - | -0.3 | - | 0.6 | V |
| Output high Voltage | $V_{OH}$ | $-I_{OH}$=0.2mA | 2.4 | - | - | V |
| Output low Voltage | $V_{OL}$ | $I_{OL}$=1.2mA | - | - | 0.4 | V |
| Power Supply Current | $I_{DD}$ | $V_{DD}$=5.0V | - | 1.8 | 3.0 | mA |
| With B/L | $I_{led}$ | $V_{DD}$=5.0V | - | 140 | | mA |
| Drive method | 1/16Duty 1/5Bias | | | | | |

## Power supply

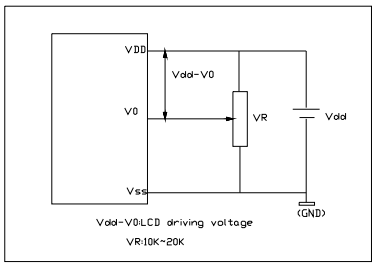


## Block diagram

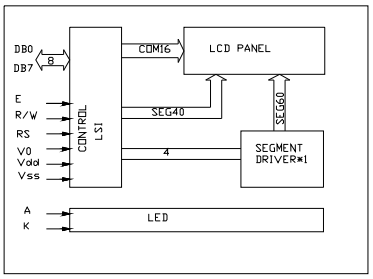


PDF created with FinePrint pdfFactory trial version http://www.fineprint.com