IRFP250

N-CHANNEL 200V - 0.073Ω - 33A TO-247
PowerMesh™II MOSFET

TYPE	V_{DSS}	$R_{DS(on)}$	I_D
IRFP250	200V	< 0.085Ω	33 A

- TYPICAL R_{DS}(on) = 0.073Ω
- EXTREMELY HIGH dv/dt CAPABILITY
- 100% AVALANCHE TESTED
- NEW HIGH VOLTAGE BENCHMARK
- GATE CHARGE MINIMIZED

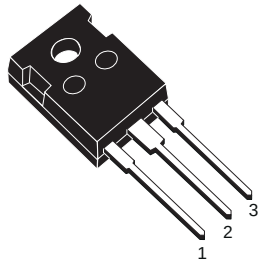

TO-247

DESCRIPTION

The PowerMESH™II is the evolution of the first generation of MESH OVERLAY™. The layout refinements introduced greatly improve the Ron*area figure of merit while keeping the device at the leading edge for what concerns swithing speed, gate charge and ruggedness.

APPLICATIONS

- HIGH CURRENT, HIGH SPEED SWITCHING
- UNINTERRUPTIBLE POWER SUPPLIES (UPS)
- DC-AC CONVERTERS FOR TELECOM, INDUSTRIAL, AND LIGHTING EQUIPMENT

INTERNAL SCHEMATIC DIAGRAM

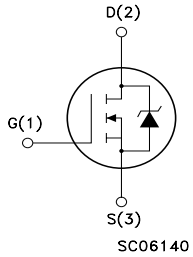

ABSOLUTE MAXIMUM RATINGS

Symbol	Parameter	Value	Unit
V_{DS}	Drain-source Voltage (V_{GS} = 0)	200	V
V_{DGR}	Drain-gate Voltage (R_{GS} = 20 kΩ)	200	V
V_{GS}	Gate- source Voltage	±20	V
I_D	Drain Current (continuos) at T_C = 25°C	33	A
I_D	Drain Current (continuos) at T_C = 100°C	20	A
I_{DM} (●)	Drain Current (pulsed)	132	A
P_{TOT}	Total Dissipation at T_C = 25°C	180	W
	Derating Factor	1.44	W/°C
dv/dt(1)	Peak Diode Recovery voltage slope	5	V/ns
T_{stg}	Storage Temperature	–65 to 150	°C
T_j	Max. Operating Junction Temperature	150	°C

(•)Pulse width limited by safe operating area

(1)I_{SD} ≤33A, di/dt ≤300A/µs, V_{DD} ≤ $V_{(BR)DSS}$, T_j ≤ T_{JMAX}.

THERMAL DATA

Rthj-case	Thermal Resistance Junction-case Max	0.66	°C/W
Rthj-amb	Thermal Resistance Junction-ambient Max	30	°C/W
Rthc-sink	Thermal Resistance Case-sink Typ	0.1	°C/W
T_l	Maximum Lead Temperature For Soldering Purpose	300	°C

AVALANCHE CHARACTERISTICS

Symbol	Parameter	Max Value	Unit
I_{AR}	Avalanche Current, Repetitive or Not-Repetitive (pulse width limited by T_j max)	33	A
E_{AS}	Single Pulse Avalanche Energy (starting T_j = 25 °C, I_D = I_{AR}, V_{DD} = 50 V)	600	mJ

ELECTRICAL CHARACTERISTICS (TCASE = 25 °C UNLESS OTHERWISE SPECIFIED)

OFF

Symbol	Parameter	Test Conditions	Min.	Typ.	Max.	Unit
$V_{(BR)DSS}$	Drain-source Breakdown Voltage	I_D = 250 µA, V_{GS} = 0	200			V
I_{DSS}	Zero Gate Voltage Drain Current (V_{GS} = 0)	V_{DS} = Max Rating			1	µA
		V_{DS} = Max Rating, T_C = 125 °C			50	µA
I_{GSS}	Gate-body Leakage Current (V_{DS} = 0)	V_{GS} = ±30V			±100	nA

ON (1)

Symbol	Parameter	Test Conditions	Min.	Typ.	Max.	Unit
$V_{GS(th)}$	Gate Threshold Voltage	V_{DS} = V_{GS}, I_D = 250 µA	2	3	4	V
$R_{DS(on)}$	Static Drain-source On Resistance	V_{GS} = 10V, I_D = 16A		0.073	0.085	Ω
$I_{D(on)}$	On State Drain Current	V_{DS} > $I_{D(on)}$ x $R_{DS(on)max}$, V_{GS} = 10V	33			A

DYNAMIC

Symbol	Parameter	Test Conditions	Min.	Typ.	Max.	Unit
g_{fs}	Forward Transconductance	V_{DS} > $I_{D(on)}$ x $R_{DS(on)max}$, I_D = 16A	10	25		S
C_{iss}	Input Capacitance	V_{DS} = 25V, f = 1 MHz, V_{GS} = 0		2850		pF
C_{oss}	Output Capacitance			420		pF
C_{rss}	Reverse Transfer Capacitance			120		pF

ELECTRICAL CHARACTERISTICS (CONTINUED)

SWITCHING ON

Symbol	Parameter	Test Conditions	Min.	Typ.	Max.	Unit
$t_{d(on)}$	Turn-on Delay Time	V_{DD} = 100V, I_D =16 A R_G = 4.7Ω, V_{GS} = 10V (see test circuit, Figure 3)		25		ns
t_r	Rise Time			50		ns
Q_g	Total Gate Charge	V_{DD} = 160V, I_D = 33 A, V_{GS} = 10V, R_G = 4.7Ω		117	158	nC
Q_{gs}	Gate-Source Charge			15		nC
Q_{gd}	Gate-Drain Charge			50		nC

SWITCHING OFF

Symbol	Parameter	Test Conditions	Min.	Typ.	Max.	Unit
$t_{r(Voff)}$	Off-voltage Rise Time	V_{DD} = 160V, I_D = 16 A, R_G = 4.7Ω, V_{GS} = 10V (see test circuit, Figure 5)		60		ns
t_f	Fall Time			40		ns
t_c	Cross-over Time			100		ns

SOURCE DRAIN DIODE

Symbol	Parameter	Test Conditions	Min.	Typ.	Max.	Unit
I_{SD}	Source-drain Current				33	A
I_{SDM} (2)	Source-drain Current (pulsed)				132	A
V_{SD} (1)	Forward On Voltage	I_{SD} = 33 A, V_{GS} = 0			1.6	V
t_{rr}	Reverse Recovery Time	I_{SD} = 33 A, di/dt = 100A/µs, V_{DD} = 100V, T_j = 150°C (see test circuit, Figure 5)		370		ns
Q_{rr}	Reverse Recovery Charge			5.4		µC
I_{RRM}	Reverse Recovery Current			29		A

Note: 1. Pulsed: Pulse duration = 300 µs, duty cycle 1.5 %.
2. Pulse width limited by safe operating area.

Safe Operating Area

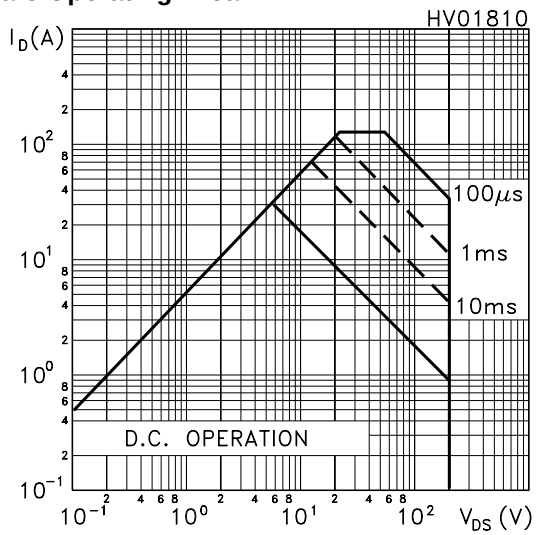

Thermal Impedance

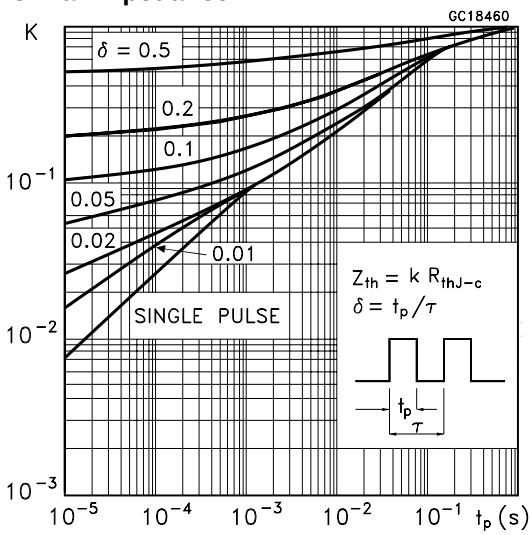

Output Characteristics

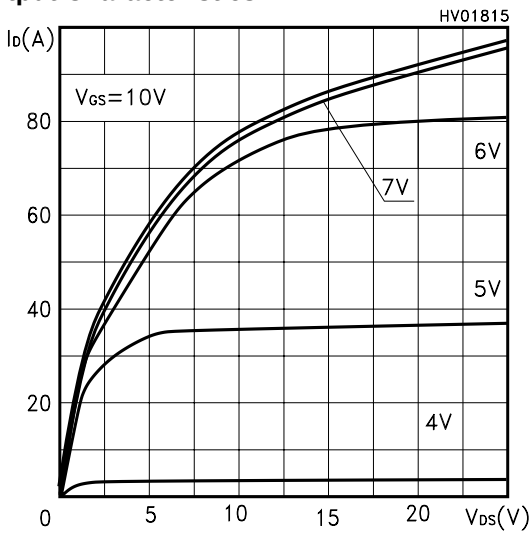

Tranfer Characteristics

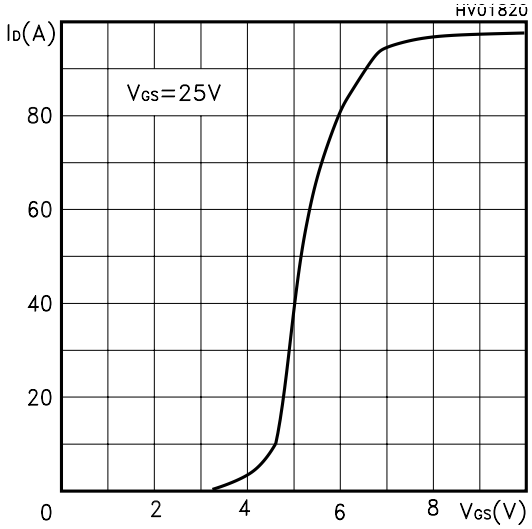

Tranconductance

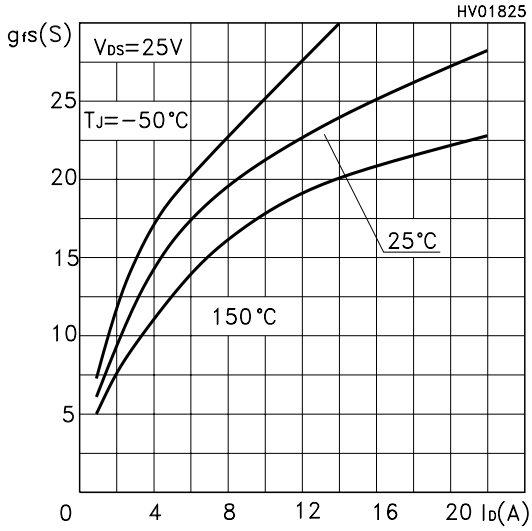

Static Drain-Source On Resistance

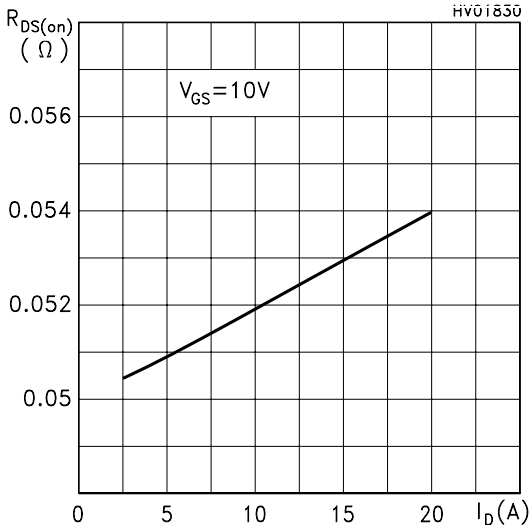

Gate Charge vs Gate-source Voltage

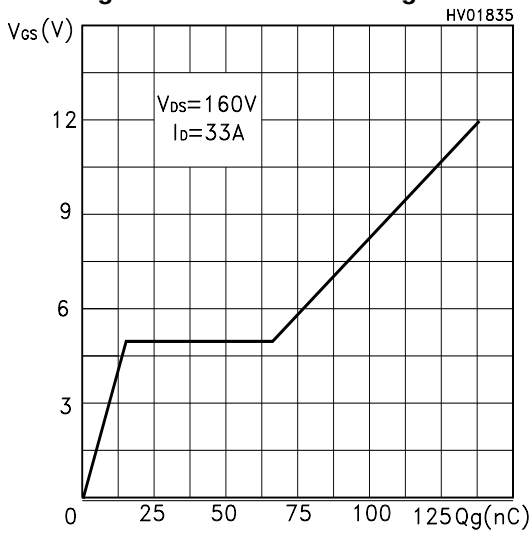

Capacitance Variations

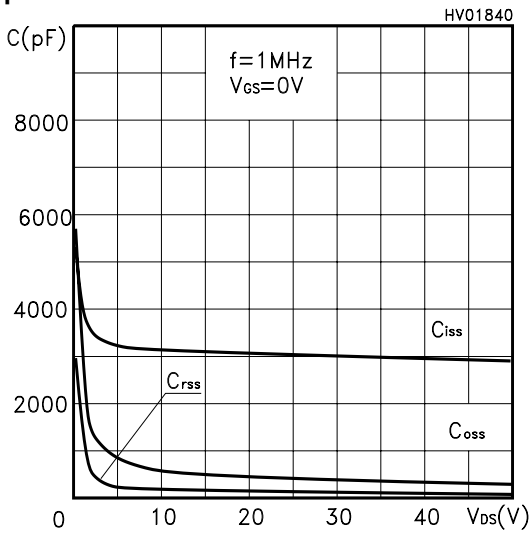

Normalized Gate Thereshold Voltage vs Temp.

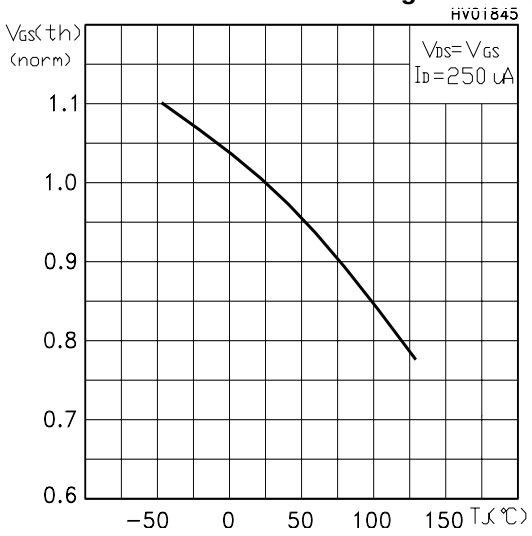

Normalized On Resistance vs Temperature

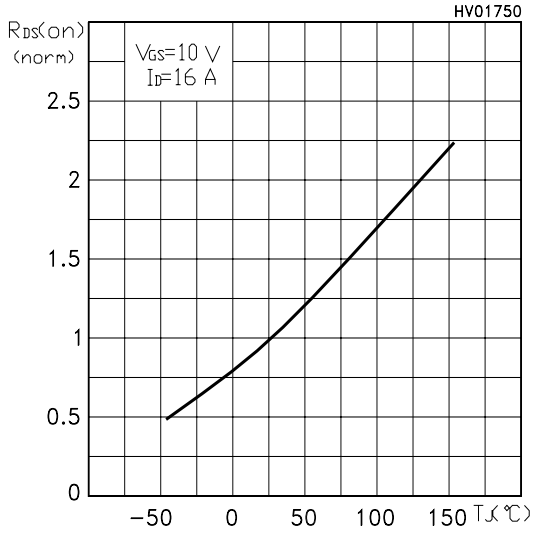

Source-drain Diode Forward Characteristics

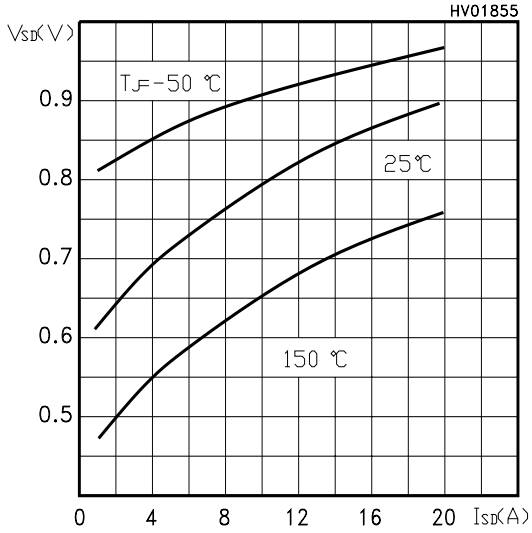

Fig. 1: Unclamped Inductive Load Test Circuit

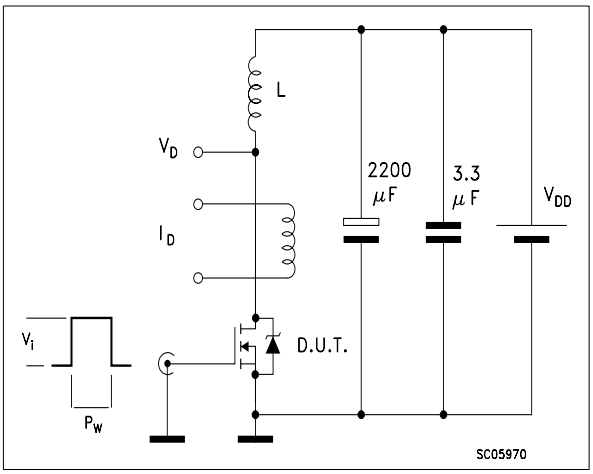

Fig. 2: Unclamped Inductive Waveform

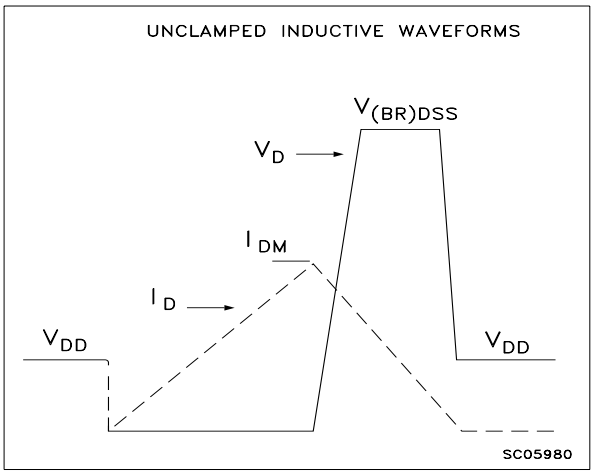

Fig. 3: Switching Times Test Circuit For Resistive Load

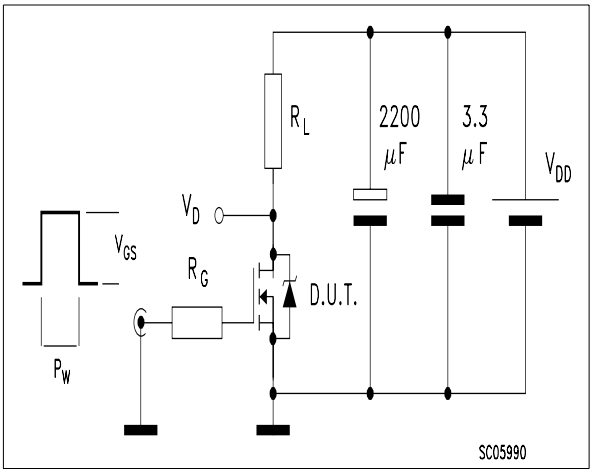

Fig. 4: Gate Charge test Circuit

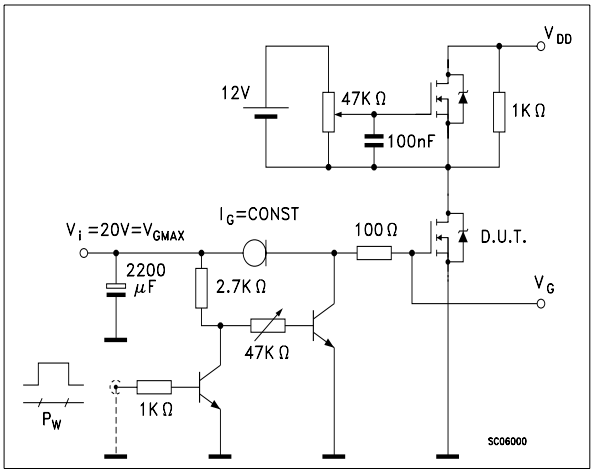

Fig. 5: Test Circuit For Inductive Load Switching And Diode Recovery Times

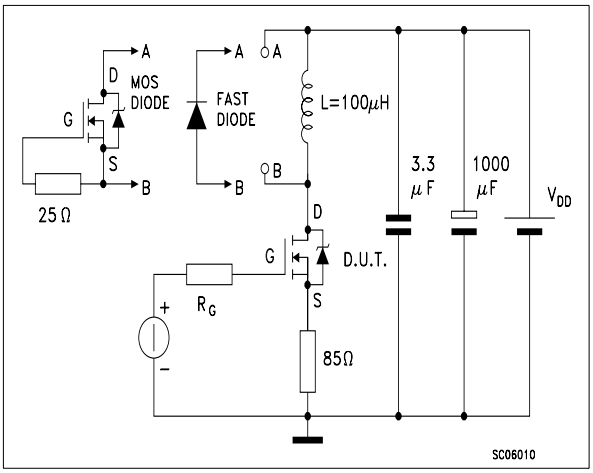

TO-247 MECHANICAL DATA

DIM.	mm			inch		
	MIN.	TYP.	MAX.	MIN.	TYP.	MAX.
A	4.7		5.3	0.185		0.209
D	2.2		2.6	0.087		0.102
E	0.4		0.8	0.016		0.031
F	1		1.4	0.039		0.055
F3	2		2.4	0.079		0.094
F4	3		3.4	0.118		0.134
G		10.9			0.429	
H	15.3		15.9	0.602		0.626
L	19.7		20.3	0.776		0.779
L3	14.2		14.8	0.559		0.582
L4		34.6			1.362	
L5		5.5			0.217	
M	2		3	0.079		0.118

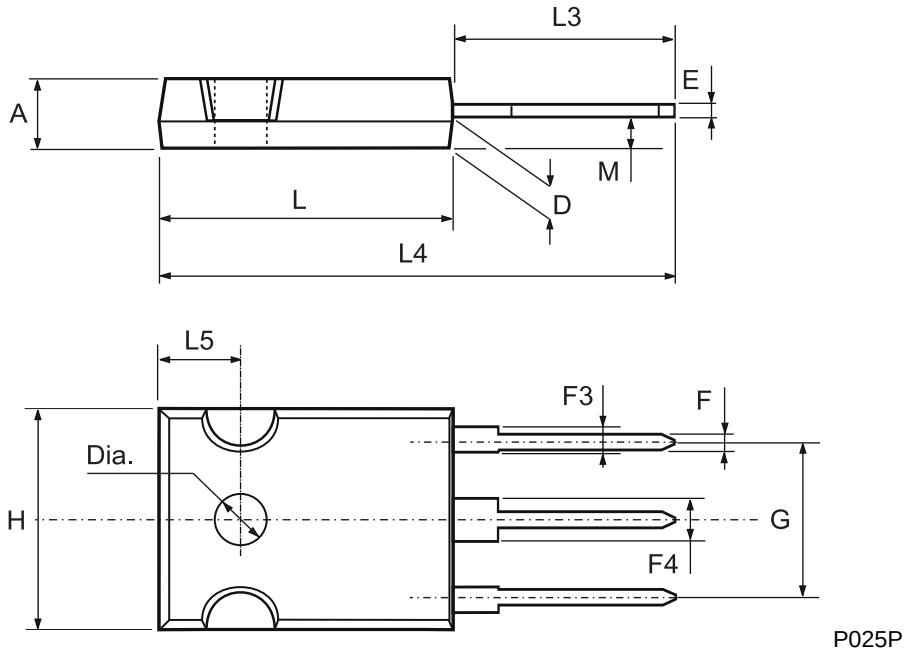

Information furnished is believed to be accurate and reliable. However, STMicroelectronics assumes no responsibility for the consequences of use of such information nor for any infringement of patents or other rights of third parties which may result from its use. No license is granted by implication or otherwise under any patent or patent rights of STMicroelectronics. Specification mentioned in this publication are subject to change without notice. This publication supersedes and replaces all information previously supplied. STMicroelectronics products are not authorized for use as critical components in life support devices or systems without express written approval of STMicroelectronics.

The ST logo is a trademark of STMicroelectronics

© 2000 STMicroelectronics – Printed in Italy – All Rights Reserved

STMicroelectronics GROUP OF COMPANIES

Australia - Brazil - China - Finland - France - Germany - Hong Kong - India - Italy - Japan - Malaysia - Malta - Morocco - Singapore - Spain - Sweden - Switzerland - United Kingdom - U.S.A.

http://www.st.com