www.DataSheet4U.com

LED T.M.
LEDTRONICS,Inc
TELE:213-676-7996
FAX: 213-676-0108

(10.16mm) SINGLE DIGIT 7 SEGMENT
0.4" NUMERIC DISPLAYS
STD RED, HI-RED, HI-EFF RED/YELLOW/GREEN

LEDTRONICS PART NO. LTS- ALL RHDP				LED RADIATION COLOR	ABSOLUTE MAXIMUM RATINGS Ta=25°C					ELECTRO-OPTICAL CHARACTERISTICS Ta=25°C					
COM. ANODE	SECOND SOURCES	COM. CATHODE	SECOND SOURCES		Pd mW	Ifp mA	If mA	Vr V	Topr °C	If mA	IvTYP µcd	VfTYP V	VfMAX V	IrMAX µA	λP nm
4710AR	MAN4710A	4740AR	MAN4740A	STD RED	55	160	25	5	-25to+85	10	480	1.7	2.0	100	655
4710AP		4740AP		HI-RED	40	60	15	5	-25to+85	10	650	2.1	2.8	100	697
4910AHR	MAN4910A	4940AHR	MAN4940A	HI-EFF RED	75	100	25	5	-25to+85	10	2000	2.1	2.8	100	635
4610AE	MAN4610A	4640AE	MAN4640A	ORANGE	75	100	25	5	-25to+85	10	2000	2.1	2.8	100	630
4810AY	MAN4810A	4840AY	MAN4840A	YELLOW	60	80	20	5	-25to+85	10	1500	2.1	2.8	100	585
4510AG	MAN4410A	4540AG	MAN4440A	GREEN	75	100	25	5	-25to+85	10	2000	2.1	2.8	100	565

NOTE: UNIVERSAL AND COMMON ANODE ±1 OVERFLOW AVAILABLE

PACKAGE DIMENSIONS

LTS—4X10A/4X40A/4X80A

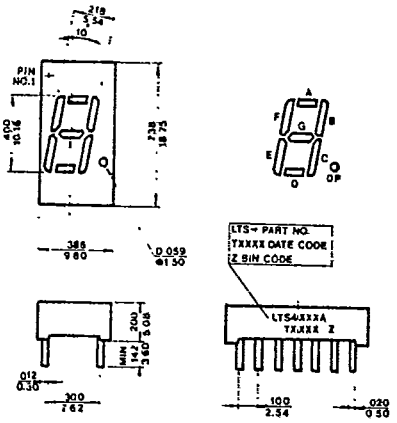

INTERNAL CIRCUIT DIAGRAM

LTS—4X10A

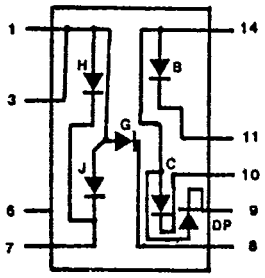

LTS—4X40A

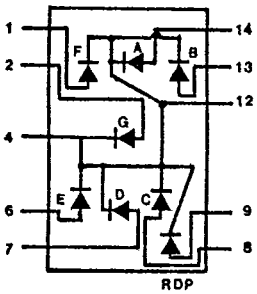

NOTE: All dimensions are in $\frac{\text{inches}}{\text{millimeters}}$, tolerance is $\frac{0.010''}{0.25\text{mm}}$ unless otherwise noted.

PIN FUNCTION

PIN NO.	CONNECTION LTS4X10A	LTS4X40A
1	CATH A	ANODE F
2	CATH F	ANODE G
3	COM.ANODE	NO PIN
4	NO PIN	COM.CATH
5	NO PIN	NO PIN
6	NO PIN	ANODE E
7	CATH E	ANODE D
8	CATH D	ANODE C
9	CATH D.P.	ANODE D.P.
10	CATH C	NO PIN
11	CATH G	NO PIN
12	NO PIN	COM.CATH
13	CATH B	ANODE B
14	COM.ANODE	ANODE A
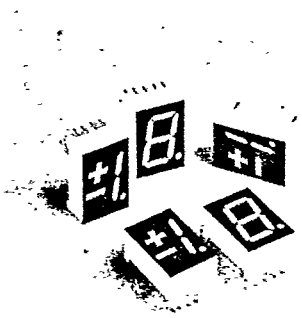
NOTE:
1] PIN 3 & 14 ARE INTERNALLY CONNECTED
2] PIN 4 & 12 ARE INTERNALLY CONNECTED