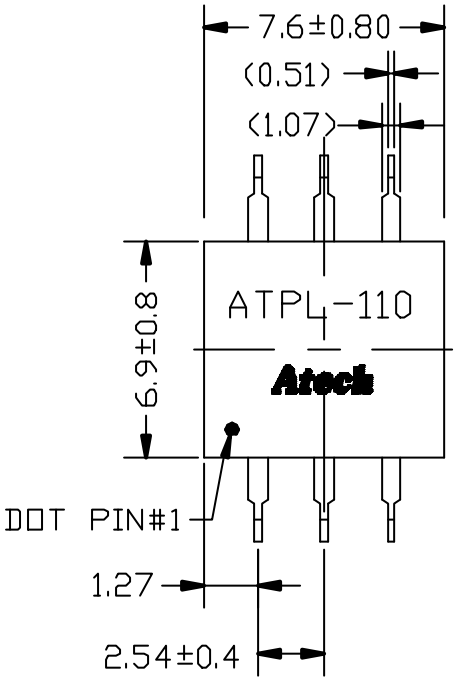

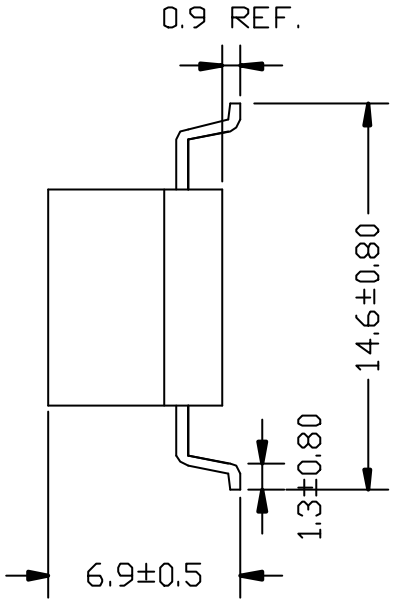

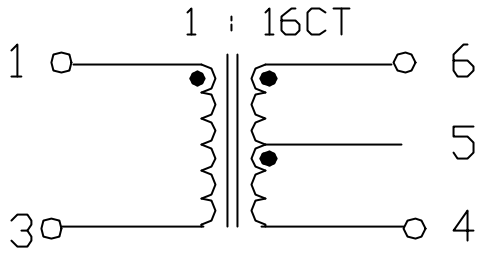

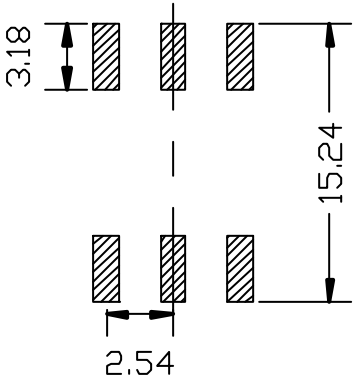

SUGGESTED LAYOUT
FOR P.C.B.

ELELCTRICAL CHARACTERISTICS:

1. IMPEDANCE RATIO : PIN 4-6 : PIN 3-1 = 16+/-5%
2. ISOLATION VOLTAGE : 500Vrms
3. INSERTION LOSS : 0.3 - 250 MHZ (-3.5dB)
   0.6 - 200 MHZ (-2.5dB)
   5 - 100 MHZ (-1.3dB)

NO	DESCRIPTION	DATE	BY	CHK	APPD
	RELEASE	11/28/00	PAIR		SUEDY

REVISIONS

Atech®
Atech Technology Co., Ltd.
TEL (02)2794-8667 FAX:(02)2794-8004

TITLE RF TRANSFORMER
DWG. NO. ATPL-110
UNITS: M/M
SAFETY
SHEET 1 OF 1
DATE 11/28/00
DRAW Pair