The drawing on this print and information therewith are proprietary to Varitronix and shall not be used in whole or in part without written permission of Varitronix.

ISSUE	AMENDMENT	DATE

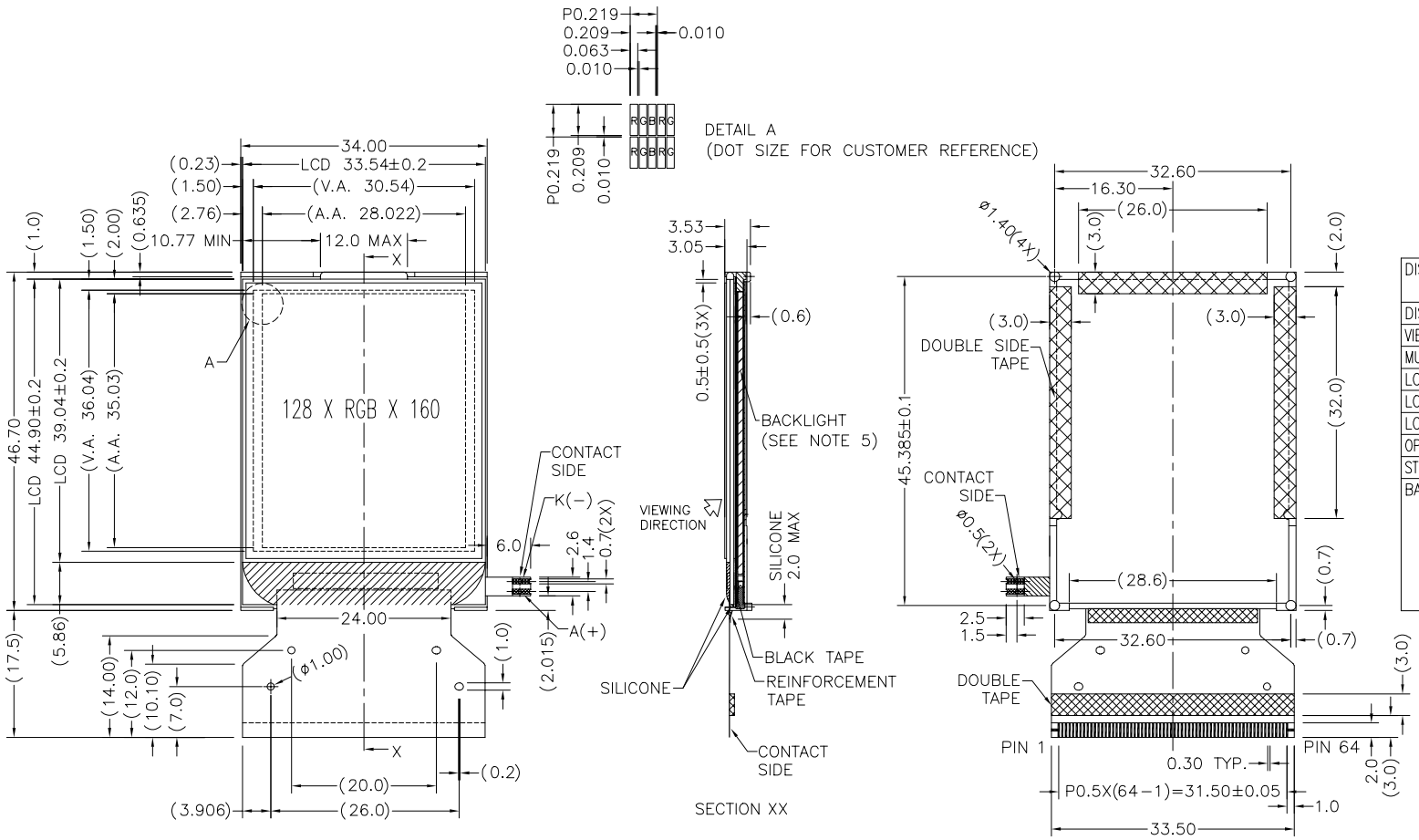

DISPLAY TYPE	65K COLOR STN,	
	−VE, TRANSMISSIVE	
DISPLAY RESOLUTION	128 X RGB X 160 DOTS	
VIEWING ANGLE	6 O'CLOCK	
MUX RATIO	1/162 DUTY	
LCD CONTROLLER/DRIVER	S6B33B2	
LOGIC VOLTAGE	3.0 V	
LCD DRIVING VOLTAGE	TBD	
OPERATING TEMPERATURE	−20°C TO +70°C	
STORAGE TEMPERATURE	−30°C TO +80°C	
BACKLIGHT	TYPE	LED02
	COLOR	WHITE
	DRIVING VOLTAGE	~9.75 V
	LUMINANCE (cd/m2) (ON THE BACKLIGHT SURFACE)	2600 (MIN)

PIN ASSIGNMENT:

1	2	3	4	5	6	7	8	9	10	11	12	13	14	15	16	17	18
NC	VOIN	PS	MPU1	MPU0	CDIR	CS1B	OTPD	OTPG	RSTB	RS	WRB	RDB	DB0	DB1	DB2	DB3	DB4
19	20	21	22	23	24	25	26	27	28	29	30	31	32	33	34	35	36
DB5	DB6	DB7	DB8	DB9	DB10	DB11	DB12	DB13	DB14	DB15	VSS	REG_ENB	INTRS	OSC4	OSC3	OSC2	OSC1
37	38	39	40	41	42	43	44	45	46	47	48	49	50	51	52	53	54
REG_OUT	VDD	VDD3	VIN1	VIN2	VOUT45	C11P	C11M	C12P	C12M	V1IN	V1T	VMIN	DC2IN	C21P	C21M	C22P	C22M
55	56	57	58	59	60	61	62	63	64								
C23P	C23M	C24P	C24M	VRN	VRP	C31P	C31M	VOIN	NC								

NOTES:

1. ◇ : SPECIAL CHARACTERISTIC
2. + : SAFETY CHARACTERISTIC
3. ▽ : CRITICAL DIMENSION
4. (...) : REFERENCE DIMENSION

VARITRONIX LIMITED

TITLE: MODULE SPEC

PROJECT NO: COG−C177MVH

TOLERANCE UNLESS OTHERWISE SPECIFIED: X.X ±0.3, X.XX ±0.1, ANGULAR: ± 1°

DIMENSIONS IN MM

MATERIAL: N/A | FINISH: N/A

SCALE: DO NOT ON SCALE | OVERALL THK:

THIRD ANGLE PROJECTION

	NAME	SIGN	DATE
DRAWN:	CHAN KAM FAI		06.01.13
CHECKED:	TIM WONG		
APPROVED:	K.P.HO		

ITEM NO.: COG−C177MVH−01

DESCRIPTION: COG−C177MVH−01 SPEC

FILE NO: COG−C177MVH−01 | REV: 0

SHEET 1 OF 1