AS 8444 / AS 8446
Programmable PWM DC Motor Driver / Controller

Key Features

- Programmable PWM DC Motor Driver / Controller with µP Interface (Three Wire Interface)
- Programmable Functions and Parameters for Motor Current, Voltage and Speed Regulation
- Single Voltage Supply in the range Vbat = 6.0 V to 30 V (Vbat,max = 40 V)
- Total Power Efficiency up to 96 %
- Low RF Emission within the whole frequency range due to an integrated special EMC compliant driver
- No EMC Filters required
- Driver fulfils EMC Level 5 (CISPR 25)
- Dynamically self-adjusting slew rate regulated switching technology
- Fully protected by programmable failure handling procedures via µP
- Fast Over Current and Over / Under Voltage Detection and Protection, Battery Voltage Monitoring
- External and On Chip Temperature Detection and Protection
- Motor Current and Speed Measurement with a shunt resistor and capability of trimming the chip for an external shunt value
- LIN Bus Interface
- Programmable Parameters:
  - EMC compliant Driver Functions
  - Over Current, Over / Under Voltage Threshold Values
  - Motor Failure Threshold Levels
  - Motor Current Measurement Range
  - Trimming for the current measurement shunt
  - PWM Frequency, Charge Pump Monitor
- Charge Pump to control high side drivers
- Integrated 5 V Power Supply for external components (µP, etc.)
- Standby and Wake-up capability
- Sleep / Wake-up Mode system controlled by the µP and the LIN Bus
- SOIC 28 Package

General Description

The AS8444 is a complete and fully protected PWM DC motor driver/controller, which could be implemented by interfacing a low cost 8-bit µP and a high-side N-channel power FET switch.

It is an advanced PWM DC motor controller subsystem with an excellent EMC behavior targeted especially for high current automotive applications. The optimization of the EMC behavior of the entire module without external components makes it easier to implement in harsh environments.

The programmability of parameters and functions allows the adaptation of the AS8444 to a wide range of applications. So the system can act either as a motor current or motor speed or motor voltage regulator. Also a full diagnosis of motor failures and power FET failures, over temperature and over/under voltage can be formed by programmable failure handling procedures using the motor characteristic and the real time measured motor current, motor speed and battery voltage.

To simplify the application of this motor regulator in complex systems (e.g. automotive environment) the circuit is endowed with a LIN bus interface.

There are two versions of this chip AS8444 and AS8446. The only difference between the AS8444 and the AS8446 is the start up behavior after system wake up or battery connection.

Applications

- Fan cooler
- Air conditioning
- Fuel pumps
- Water and oil pumps
- General purpose DC Motor Regulators
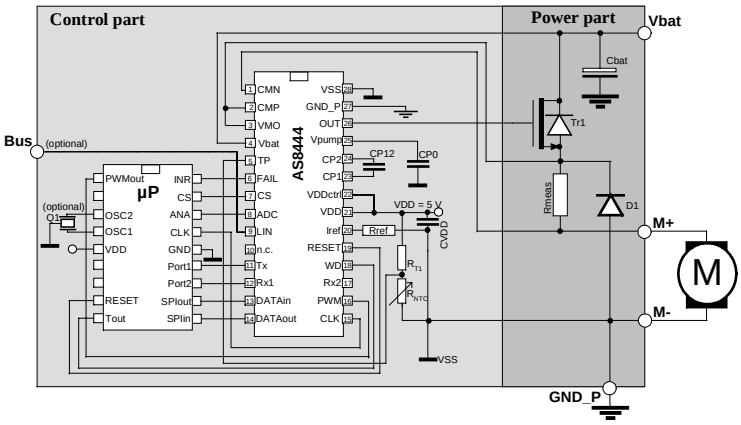
Typical Application Diagram