# 7mm SQUARE THIN TYPE ISOLATOR

## MODEL ESI-7SG [ ] 0906 M 04 - T

(1) (2) (3) (4) (5) (6)

(1) Series ESI-7SG ; 2.5mm Height
(2) Rotating Direction (R or L)
(3) Center Frequency
(4) M ; MHz
(5) Control No.
(6) T ; Taping
Blank ; Bulk

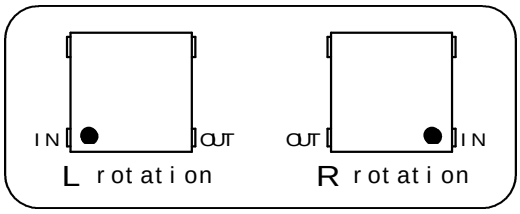


## Specification

| Frequency (MHz) | Ins. Loss Max. (dB) | Isolation Min. (dB) | V.S.W.R. Max. | Attenuation at 2f Min. (dB) | Attenuation at 3f Min. (dB) | Handling Power Max. (W) | Reflection Power Max. (W) |
|---|---|---|---|---|---|---|---|
| 887-925 | 0.60 | 15 | 1.5 | 20 | 20 | 10.0 | 2.0 |

Operating Temperature(deg.C) ; -35 to +85
Impedance ; 50 ohms Typ.

## Shape & Size

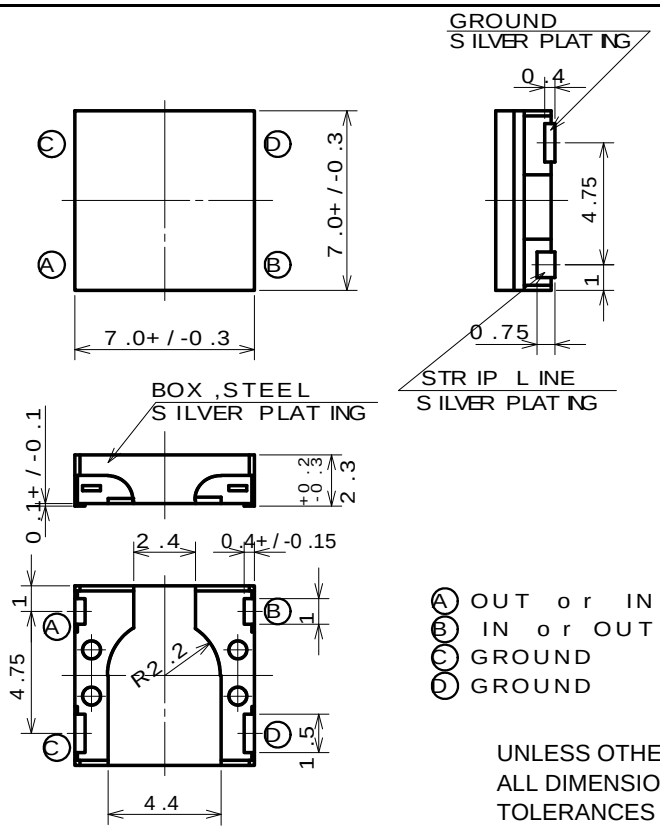


A OUT or IN
B IN or OUT
C GROUND
D GROUND

UNLESS OTHERWISE SPECIFIED
ALL DIMENSIONS ARE IN mm
TOLERANCES ARE +/-0.2mm

TBE053

Hitachi Metals, Ltd. Tottori Works