I²PAK Package Dimensions

FAIRCHILD SEMICONDUCTOR™

I²PAK (FS PKG CODE AO)

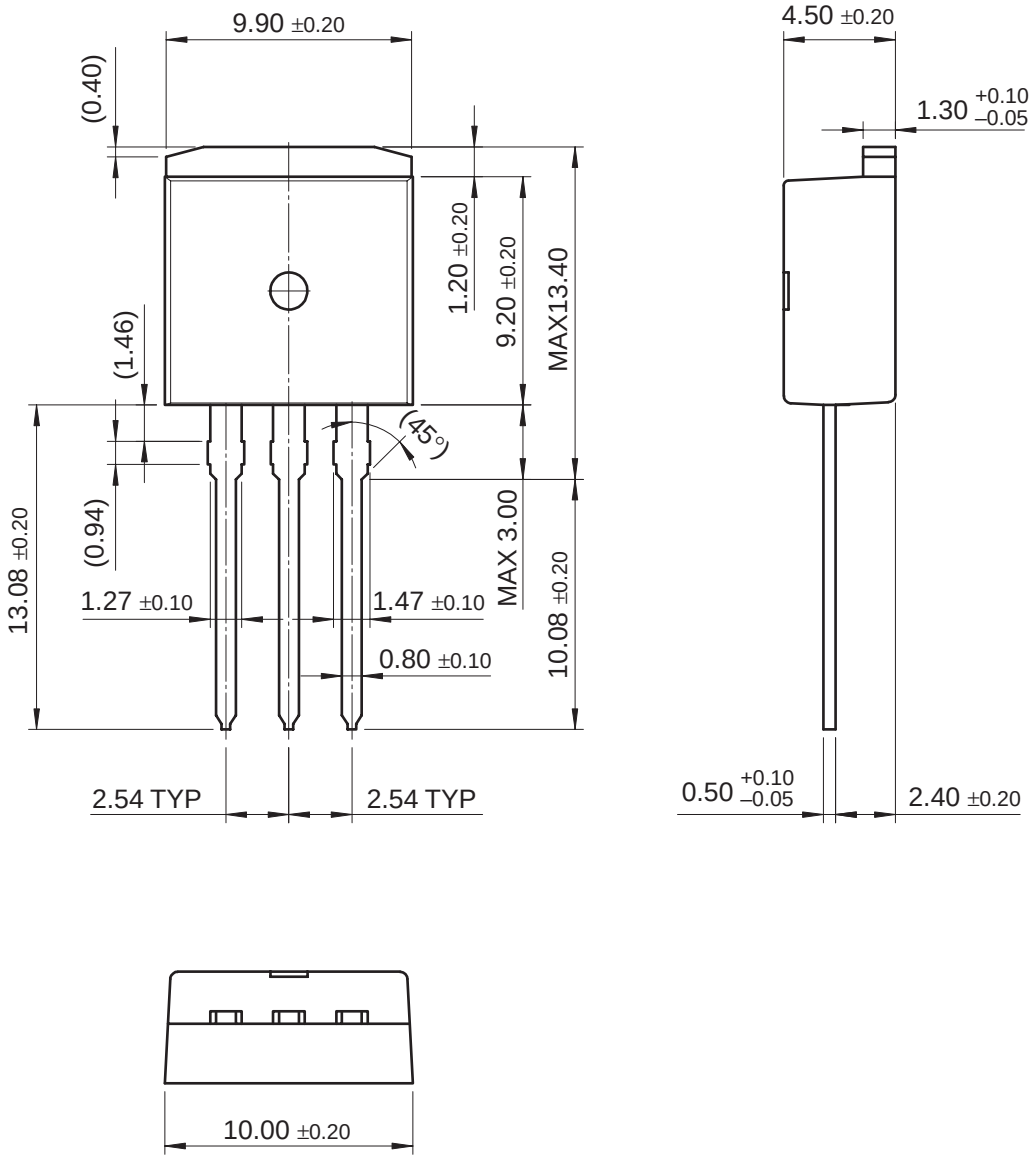

Dimensions in Millimeters