Specifications

Rated voltage	12.0 V dc	
Operating voltage	8.0 ~ 15.0 V dc	
Mean curren	30 mA max.	
Sound output	85 db min. (90 typical)	at 10 cm / 12 V dc
Resonant frequency	2400 ±400 Hz	
Operating temperature	-30 ~ +70° C	
Storage temperature	-40 ~ +85° C	
Dimensions	L12.8 x W12.8 x H7.1 mm	
Weight	2.0 g	
Material	PPS (S-206)	
Terminal	SMD type (Sn Plating)	
RoHS	yes	

Appearance Drawing

Tolerance: ±0.5

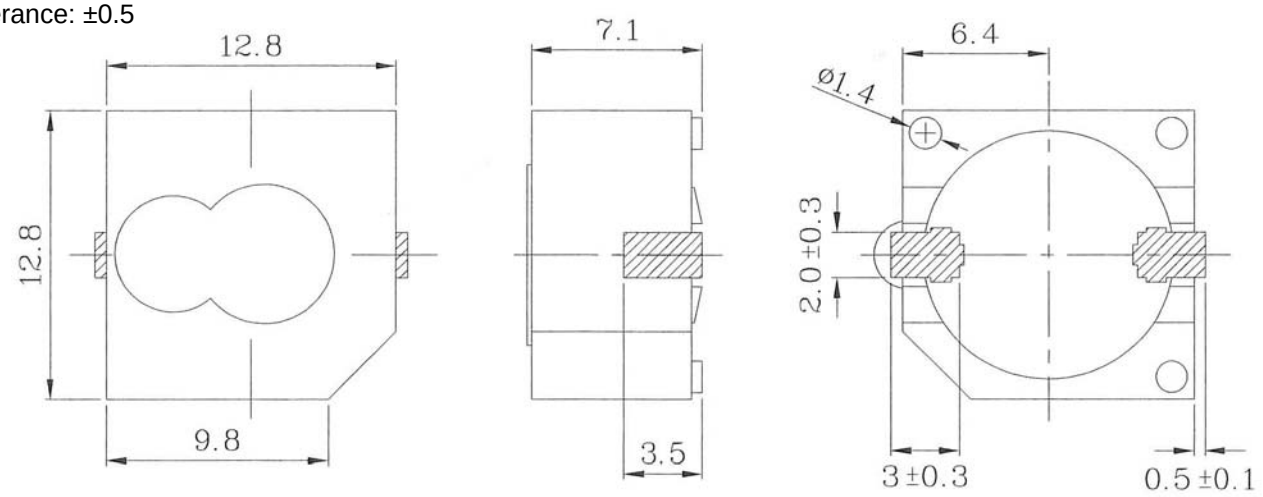

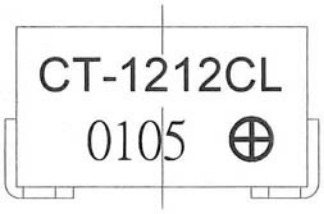

Voltage: Sound Pressure Level / Voltage: Current Consumption

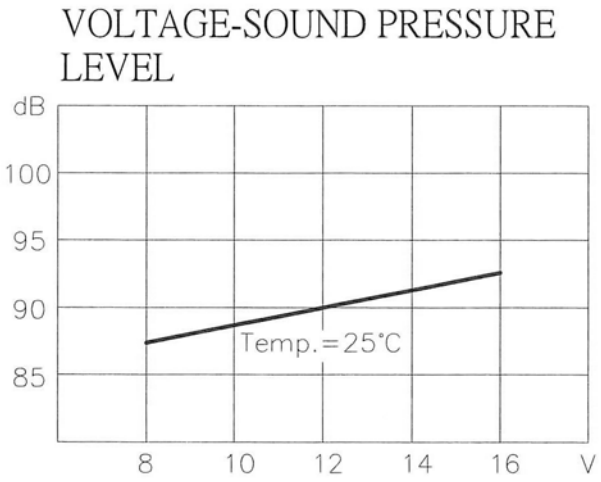

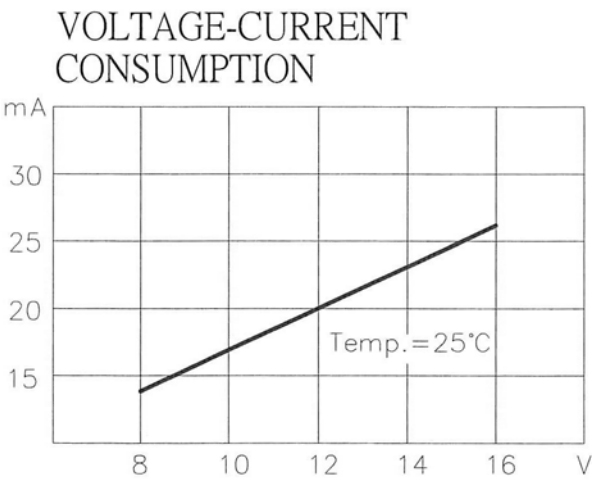

Measurement Method

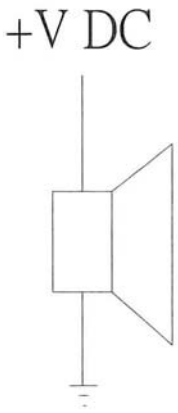

Mechanical Characteristics

Item	Test Condition	Evaluation Standard
Solderability	Lead terminals are immersed in solder bath of 270 ±5°C for 3 ±1 seconds.	95% of the surface of the lead pads must be wet with solder.
Soldering Heat Resistance	The product should follow the reflow temperature cuve to test its reflow thermo stability.	No interference in operation.
Terminal Mechanical Strength	For 10 seconds, the force of 9.8N (1.0kg) is applied to each terminal in axial direction.	No damage or cutting off.
Vibration	The buzzer shall be measured after applying a vibration amplitude of 1.5 mm with 10 to 55 Hz band of vibration frequency to each of the 3 perpendicular directions for 2 hours.	After the test, the part shall meet specifications without any damage to the appearance or performance. The SPL should be within ±10 dBA of the initial SPL measurement.
Drop Test	The part will be dropped from a height of 75 cm onto a 40 mm thick wooden board 3 times in 3 axes (X, Y, Z) for a total of 9 drops.	

Environment Test

Item	Test Condition	Evaluation Standard
High temp. test	The part will be subjected to +85°C for 96 hours.	After the test, the part shall meet specifications without any damage to the appearance or performance. After 4 hours at 25°C, the SPL should be within ±10 dBA of the initial SPL measurement.
Low temp. test	The part will be subjected to -40°C for 96 hours	
Thermal shock	The part will be subjected to 10 cycles. One cycle will consist of: 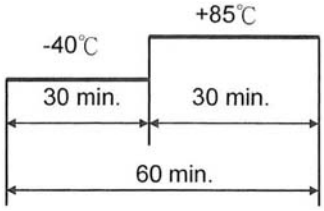	
Temp./Humidity cycle	The part shall be subjected to 10 cycles. One cycle will last for 24 hours and consist of: 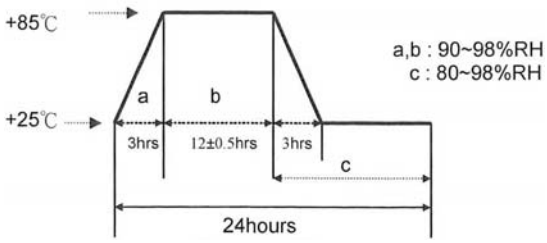	

Reliability Test

Item	Test Condition	Evaluation Standard
Operating (Life Test)	1. Continuous life test: The part will be subjected to 72 at +55°C with 12.0 V dc applied. 2. Intermittent life test: A duty cycle of 1 minute on, 1 minute off, a minimum of 10,000 times at room temp (+25 ±10°C) with 12.0 V dc applied.	After the test, the part shall meet specifications without any damage to the appearance or performance. After 4 hours at 25°C, the SPL should be within ±10 dBA of the initial SPL measurement.

Test Conditions

Standard Test Condition	a) Tempurature: +5 ~ +35°C	b) Humidity: 45 - 85%	c) Pressure: 860-1060 mbar
Judgement Test Condition	a) Tempurature: +25 ±2°C	b) Humidity: 60 - 70%	c) Pressure: 860-1060 mbar

Recommended Temperature Profile for Reflow Oven

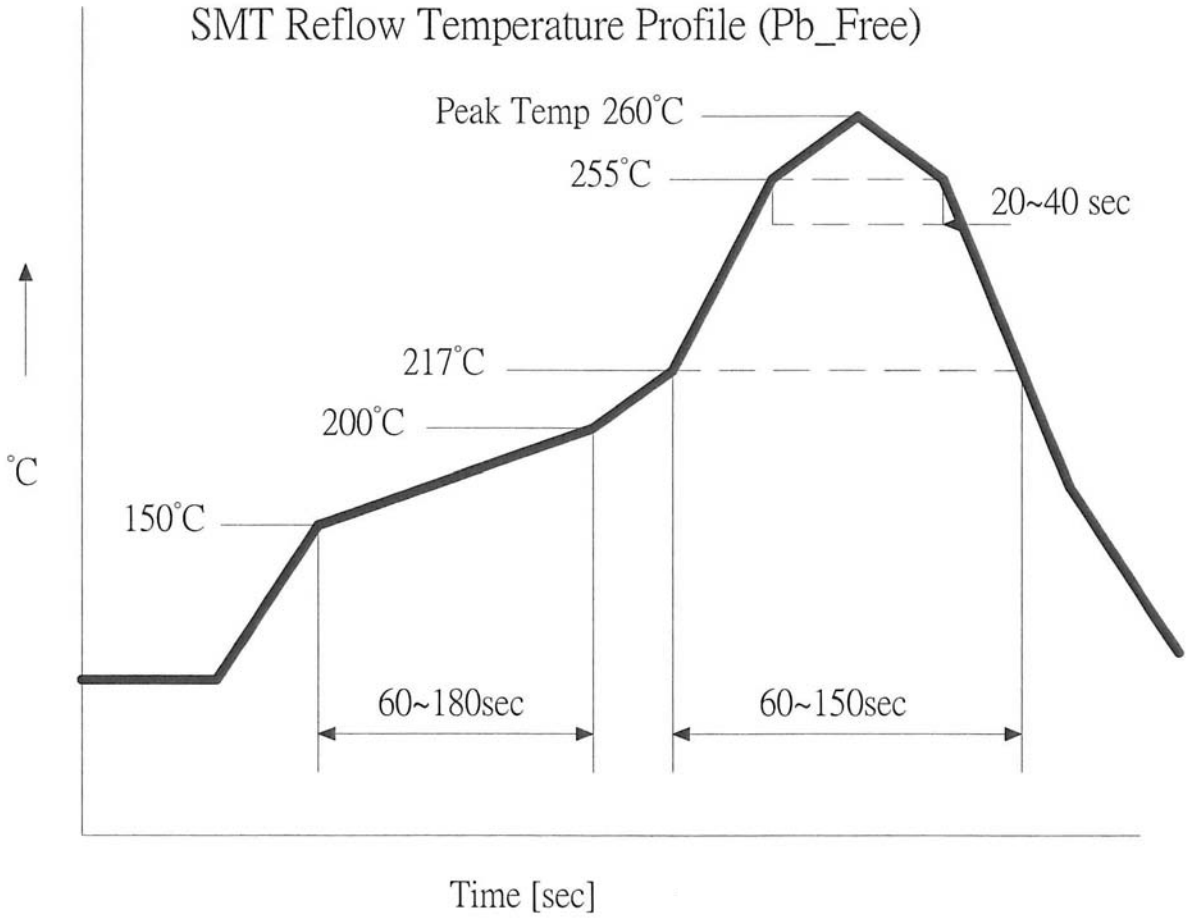

Recommended Land Pattern

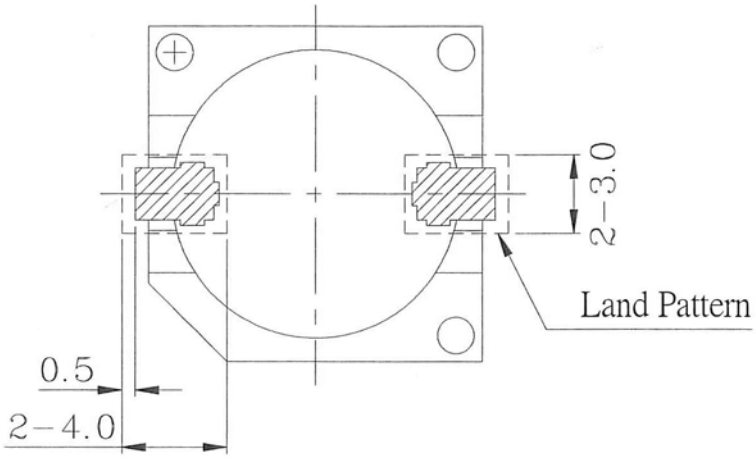

Packaging

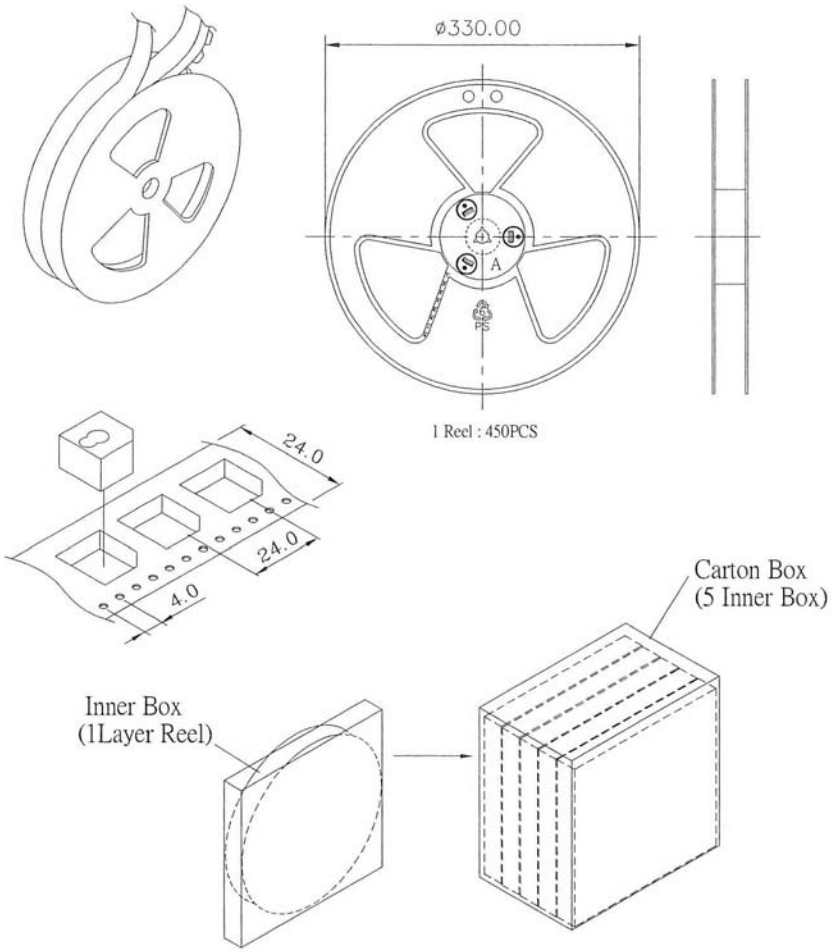

Inner Box	340mmx340mmx40mm	1x450PCS=450PCS
Carton Box	350mmx175mmx355mm	5x450PCS=2,250PCS