140 MHz Bandpass SAW Filter

24 MHz Bandwidth

BP62110

Specifications					
Parameter	Sym	Minimum	Typical	Maximum	Unit
Center Frequency at 25°C	fc	139.75	140	140.25	MHz
Insertion Loss at fc	IL	-	24.7	26.5	dB
1 dB Bandwidth	BW_1	22.5	22.9	-	MHz
3 dB Bandwidth	BW_3	24.0	24.3	-	MHz
40dB Bandwidth	BW_{40}	-	29.96	30.3	MHz
Passband Variation	-	-	0.5	0.6	dB
Phase Linearity	-	-	4	6	Deg
Group Delay Variation	-	-	15	35	nsec
Absolute Delay	-	-	1.199	-	µsec
Ultimate Rejection	-	50	55	-	dB
Substrate Material	-	-	128-$LiNbO_3$	-	-
Ambient Temperature	Ta	-	25	-	°C
Operating Temperature Range	To	-55	25	85	°C

Typical Performance

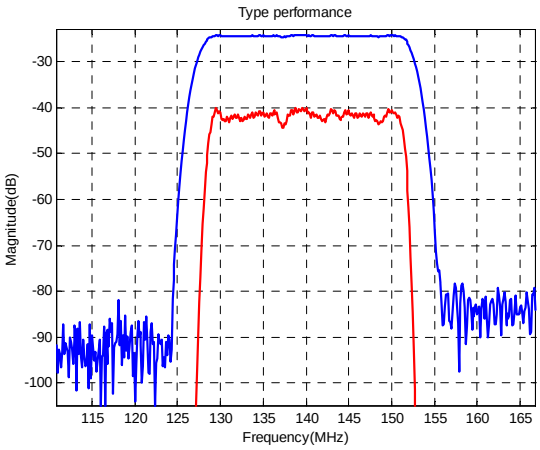

Package Outline

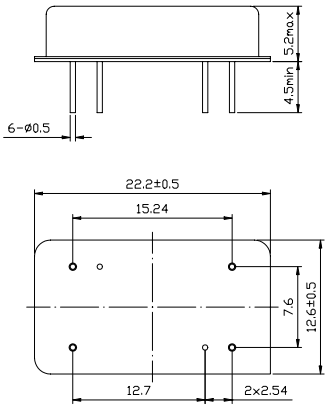

Matching Configuration

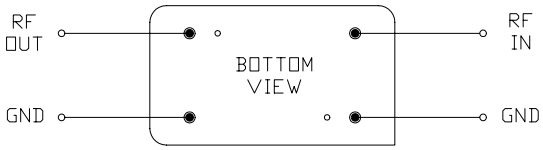

No Matching Required

Nominal Source/Load Impedance : 50 Ω