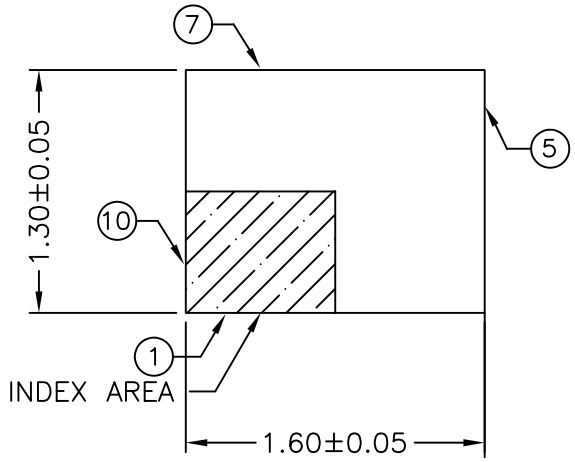

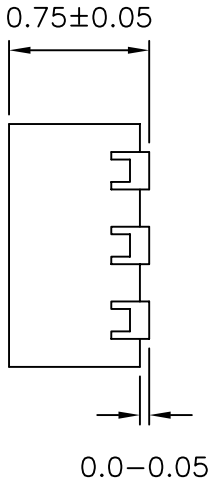

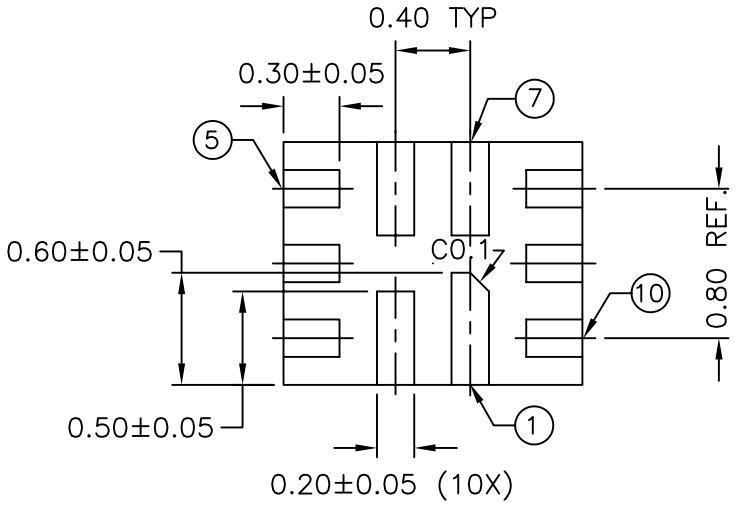

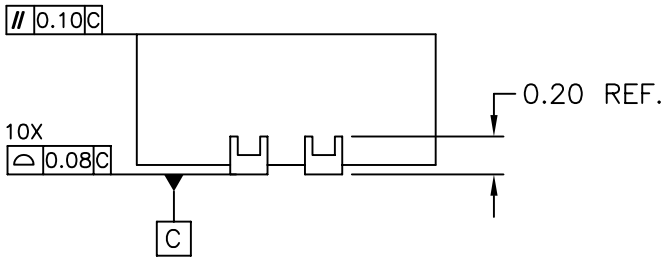

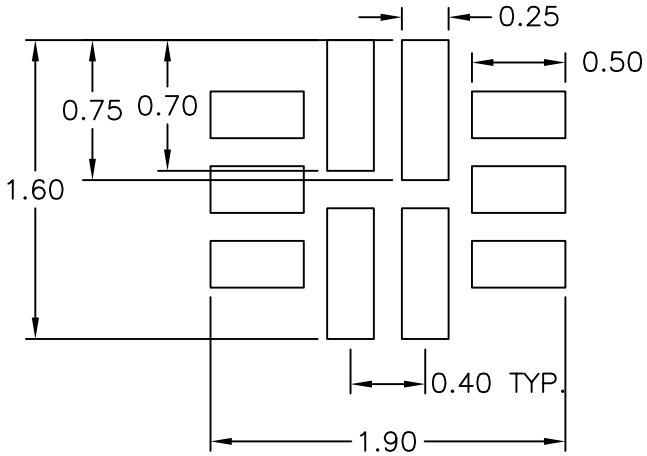

Recommended Land Pattern

Notes:
1) All dimensions are in millimeters
2) Ref JEDEC: MO-220

PERICOM® Semiconductor Corporation

DATE: 03/14/08

DESCRIPTION: 10-Contact, Thin Fine Pitch Quad Flat No-Lead (TQFN)

PACKAGE CODE: ZL (ZL10)

DOCUMENT CONTROL #: PD-2052 **REVISION: B**