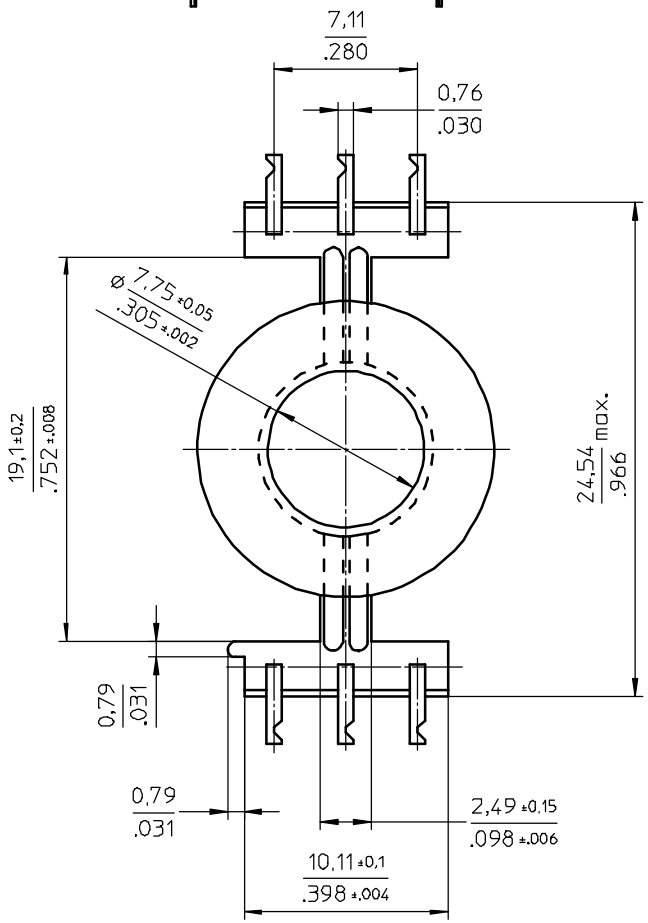

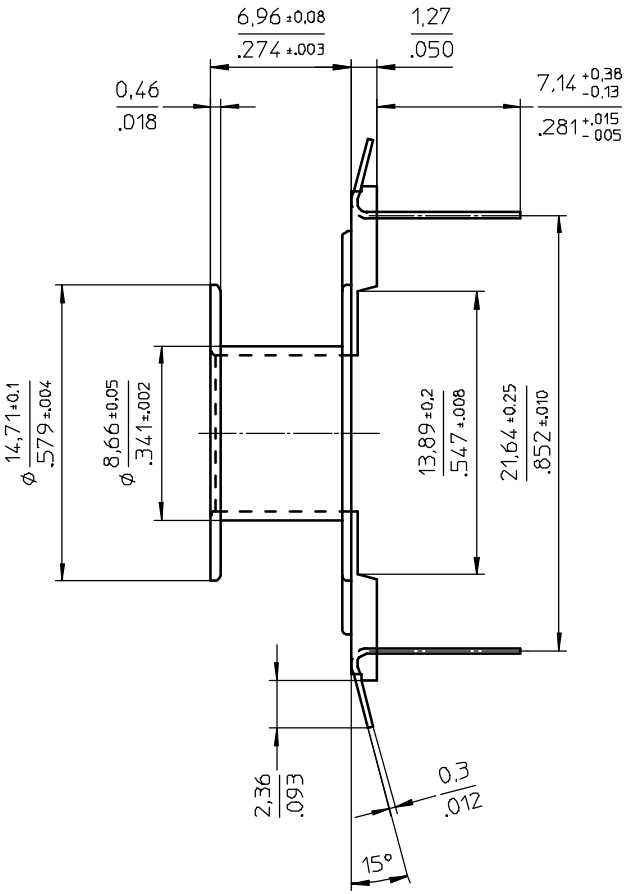

Grid pattern

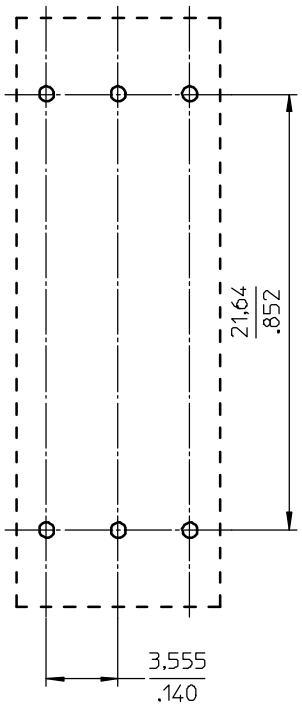

Coil former material.	Zytel FR50 (PA6.6), glass-reinforced. UL file number: E41938 - UL94V-0.
max. operating temp:	130°C, class B
pin material:	CuZn, Sn plated.
solderability:	acc. to IEC 60 068-2-20 part2, Test Ta method 1, 235°C-2sec.
mean length of turn:	1.445 inch (36,7 mm)
winding area:	0.028 sq. inch. (18,1 mm^2)

CLASS,NO.	CPV-P18/11-1S-6PDL-Z	4335 060 26441	05-09-26
NAME NAAM Veekens	SUPERS. VERY.	SH BL. SH BL. 112 – 001	A3
MPA CHECK CONTR.	DAT. 05-09-26	Property of Eigendom van	© FERROXCUBE 2000