BLF6G10-200RN; BLF6G10LS-200RN

Power LDMOS transistor

Rev. 02 — 21 January 2010 | Product data sheet

1. Product profile

1.1 General description

200 W LDMOS power transistor for base station applications at frequencies from 700 MHz to 1000 MHz.

Table 1. Typical performance

Typical RF performance at T_{case} = 25 °C in a class-AB production test circuit.

Mode of operation	f (MHz)	V_{DS} (V)	$P_{L(AV)}$ (W)	G_p (dB)	η_D (%)	ACPR (dBc)
2-carrier W-CDMA	869 to 894	28	40	20	28.5	–39[1]

[1] Test signal: 3GPP; test model 1; 64 DPCH; PAR = 7.5 dB at 0.01 % probability on CCDF per carrier; carrier spacing 5 MHz.

CAUTION

This device is sensitive to ElectroStatic Discharge (ESD). Therefore care should be taken during transport and handling.

1.2 Features

- Typical 2-carrier W-CDMA performance at frequencies of 869 MHz and 894 MHz, a supply voltage of 28 V and an I_{Dq} of 1400 mA:
  - Average output power = 40 W
  - Power gain = 20 dB
  - Efficiency = 28.5 %
  - ACPR = –39 dBc
- Easy power control
- Integrated ESD protection
- Enhanced ruggedness
- High efficiency
- Excellent thermal stability
- Designed for broadband operation (700 MHz to 1000 MHz)
- Internally matched for ease of use
- Compliant to Directive 2002/95/EC, regarding restriction of hazardous substances (RoHS)

founded by Philips

1.3 Applications

- RF power amplifiers for GSM, GSM EDGE, W-CDMA and CDMA base stations and multicarrier applications in the 700 MHz to 1000 MHz frequency range.

2. Pinning information

Table 2. Pinning

Pin	Description		Simplified outline	Graphic symbol
BLF6G10-200RN (SOT502A)				
1	drain		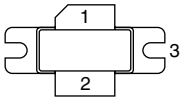	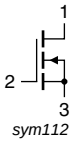
2	gate			
3	source	[1]		
BLF6G10LS-200RN (SOT502B)				
1	drain		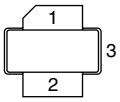	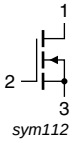
2	gate			
3	source	[1]		

[1] Connected to flange.

3. Ordering information

Table 3. Ordering information

Type number	Package		
	Name	Description	Version
BLF6G10-200RN	-	flanged LDMOST ceramic package; 2 mounting holes; 2 leads	SOT502A
BLF6G10LS-200RN	-	earless flanged LDMOST ceramic package; 2 leads	SOT502B

4. Limiting values

Table 4. Limiting values

In accordance with the Absolute Maximum Rating System (IEC 60134).

Symbol	Parameter	Conditions	Min	Max	Unit
V_{DS}	drain-source voltage		-	65	V
V_{GS}	gate-source voltage		–0.5	+13	V
I_D	drain current		-	49	A
T_{stg}	storage temperature		–65	+150	°C
T_j	junction temperature		-	225	°C

5. Thermal characteristics

Table 5. Thermal characteristics

Symbol	Parameter	Conditions	Type	Typ	Unit
$R_{th(j-case)}$	thermal resistance from junction to case	T_{case} = 80 °C; P_L = 40 W	BLF6G10-200RN	0.50	K/W
			BLF6G10LS-200RN	0.35	K/W

6. Characteristics

Table 6. Characteristics

T_j = 25 °C unless otherwise specified.

Symbol	Parameter	Conditions	Min	Typ	Max	Unit
$V_{(BR)DSS}$	drain-source breakdown voltage	V_{GS} = 0 V; I_D = 0.9 mA	65	-	-	V
$V_{GS(th)}$	gate-source threshold voltage	V_{DS} = 10 V; I_D = 270 mA	1.4	2.0	2.4	V
V_{GSq}	gate-source quiescent voltage	V_{DS} = 28 V; I_D = 1620 mA	1.7	2.2	2.7	V
I_{DSS}	drain leakage current	V_{GS} = 0 V; V_{DS} = 28 V	-	-	4.2	μA
I_{DSX}	drain cut-off current	V_{GS} = $V_{GS(th)}$ + 3.75 V; V_{DS} = 10 V	40	48	-	A
I_{GSS}	gate leakage current	V_{GS} = 11 V; V_{DS} = 0 V	-	-	420	nA
g_{fs}	forward transconductance	V_{DS} = 10 V; I_D = 9.45 A	11	18	26	S
$R_{DS(on)}$	drain-source on-state resistance	V_{GS} = $V_{GS(th)}$ + 3.75 V; I_D = 9.45 A	0.012	0.07	0.093	Ω
C_{rs}	feedback capacitance	V_{GS} = 0 V; V_{DS} = 28 V; f = 1 MHz	-	3	-	pF

7. Application information

Table 7. Application information

Mode of operation: 2-carrier W-CDMA; PAR 7.5 dB at 0.01 % probability on CCDF; 3GPP test model 1; 1-64 PDPCH; f_1 = 871.5 MHz; f_2 = 876.5 MHz; f_3 = 886.5 MHz; f_4 = 891.5 MHz; RF performance at V_{DS} = 28 V; I_{Dq} = 1400 mA; T_{case} = 25 °C; unless otherwise specified; in a class-AB production test circuit.

Symbol	Parameter	Conditions	Min	Typ	Max	Unit
$P_{L(AV)}$	average output power		-	40	-	W
G_p	power gain	$P_{L(AV)}$ = 40 W	19	20	-	dB
IRL	input return loss	$P_{L(AV)}$ = 40 W	-	−6.4	−4.5	dB
η_D	drain efficiency	$P_{L(AV)}$ = 40 W	25	28.5	-	%
ACPR	adjacent channel power ratio	$P_{L(AV)}$ = 40 W	-	−39.4	−36	dBc

7.1 Ruggedness in class-AB operation

The BLF6G10-200RN and BLF6G10LS-200RN are enhanced rugged devices and are capable of withstanding a load mismatch corresponding to VSWR = 10 : 1 through all phases under the following conditions: V_{DS} = 28 V; I_{Dq} = 1400 mA; P_L = 200 W; f = 894 MHz.

7.2 One-tone CW

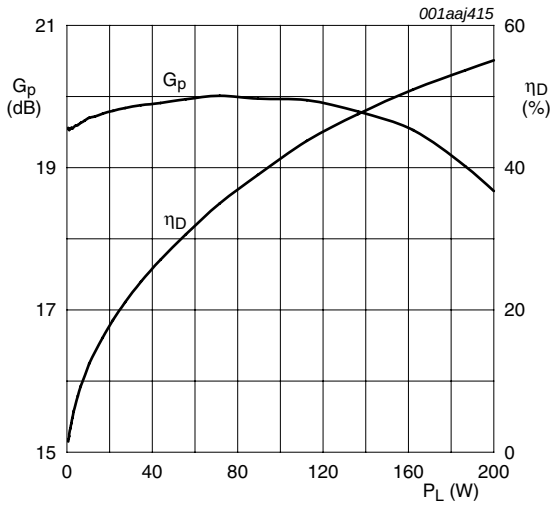

V_{DS} = 28 V; I_{Dq} = 1400 mA; f = 881 MHz.

Fig 1. One-tone CW power gain and drain efficiency as function of load power; typical values

7.3 Two-tone CW

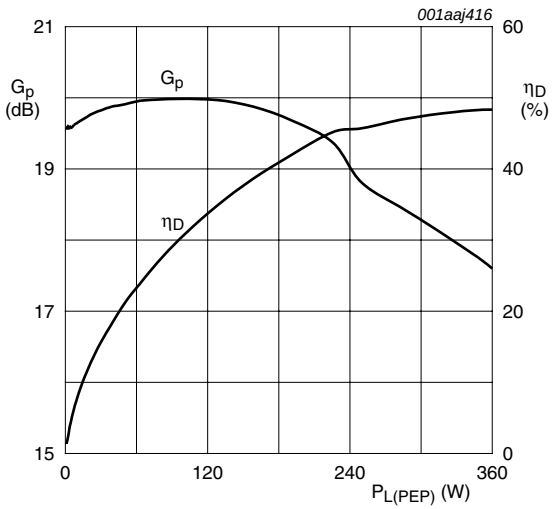

V_{DS} = 28 V; I_{Dq} = 1400 mA; f = 881 MHz (±100 kHz).

Fig 2. Two-tone CW power gain and drain efficiency as function of peak envelope load power; typical values

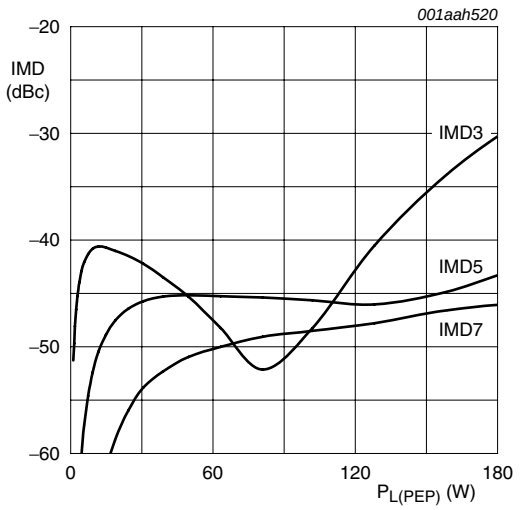

V_{DS} = 28 V; I_{Dq} = 1400 mA; f = 881 MHz (±100 kHz).

Fig 3. Two-tone CW intermodulation distortion as a function of peak envelope load power; typical values

7.4 2-carrier W-CDMA

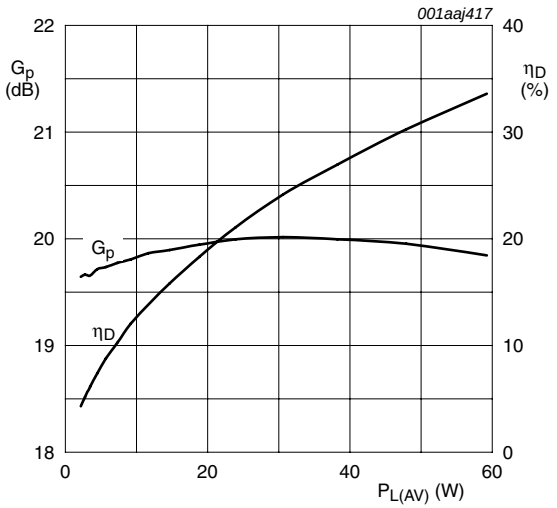

V_{DS} = 28 V; I_{Dq} = 1400 mA; f = 881 MHz (±5 MHz); carrier spacing 10 MHz.

Fig 4. 2-carrier W-CDMA power gain and drain efficiency as function of average load power; typical values

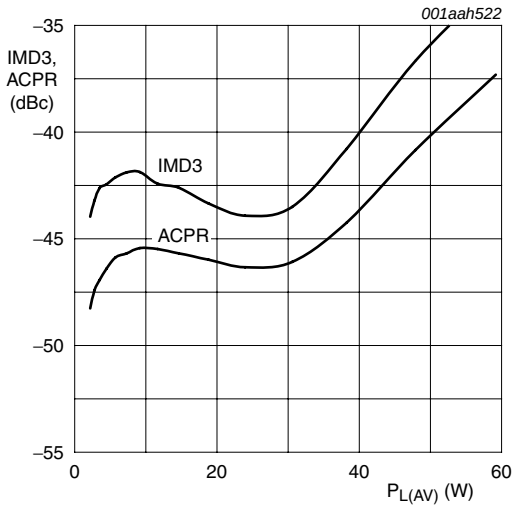

V_{DS} = 28 V; I_{Dq} = 1400 mA; f = 881 MHz (±5 MHz); carrier spacing 10 MHz.

Fig 5. 2-carrier W-CDMA adjacent channel power ratio and third order intermodulation distortion as function of average load power; typical values

8. Test information

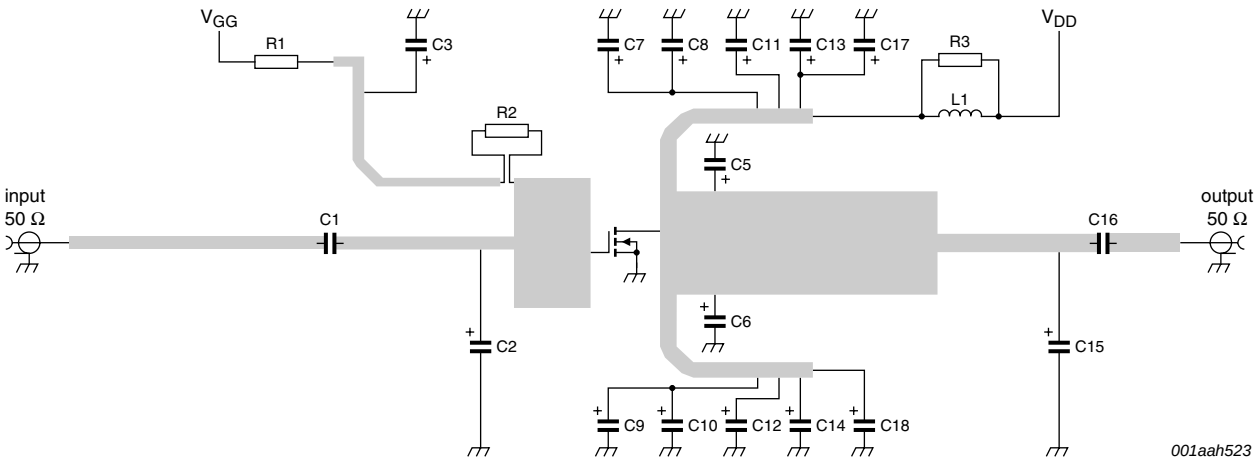

The drawing is not to scale.

Fig 6. Test circuit for operation at 800 MHz

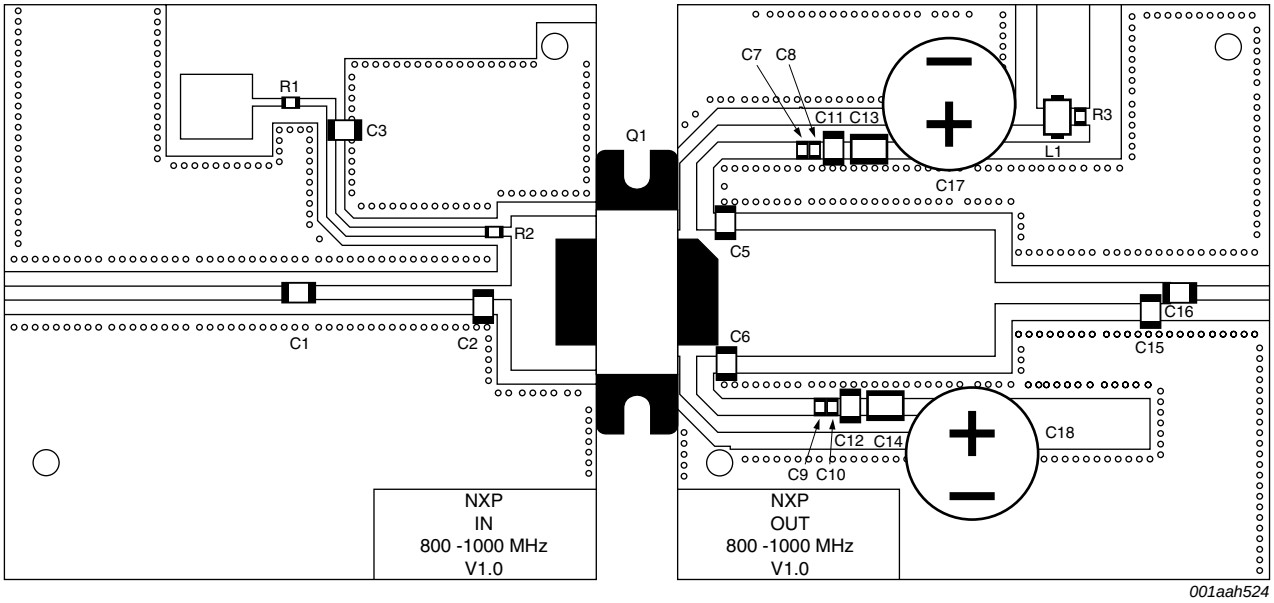

The striplines are on a double copper-clad Taconic RF35 Printed-Circuit Board (PCB) with ε_r = 3.5 and thickness = 0.76 mm.

See Table 8 for list of components.

The drawing is not to scale.

Fig 7. Component layout

Table 8. List of components

See Figure 6 and Figure 7.

Component	Description	Value		Remarks
C1, C3, C11, C12, C16	multilayer ceramic chip capacitor	68 pF	[1]	solder vertically
C2	multilayer ceramic chip capacitor	13 pF	[1]	solder vertically
C5, C6	multilayer ceramic chip capacitor	10 pF	[1]	solder vertically
C7, C8, C9, C10	electrolytic capacitor	220 nF		Vishay VJ1206Y224KXB
C13, C14	multilayer ceramic chip capacitor	4.7 μF; 50 V	[2]	
C15	multilayer ceramic chip capacitor	1.5 pF	[1]	solder vertically
C17, C18	electrolytic capacitor	220 μF; 63 V		
L1	ferrite SMD bead	-		Ferroxcube BDS 3/3/4.6-4S2 or equivalent
Q1	BLF6G10LS-200RN	-		
R1, R2, R3	SMD resistor	9.1 Ω; 0.1 W		

[1] American Technical Ceramics type 100B or capacitor of same quality.

[2] TDK or capacitor of same quality.

9. Package outline

Flanged LDMOST ceramic package; 2 mounting holes; 2 leads **SOT502A**

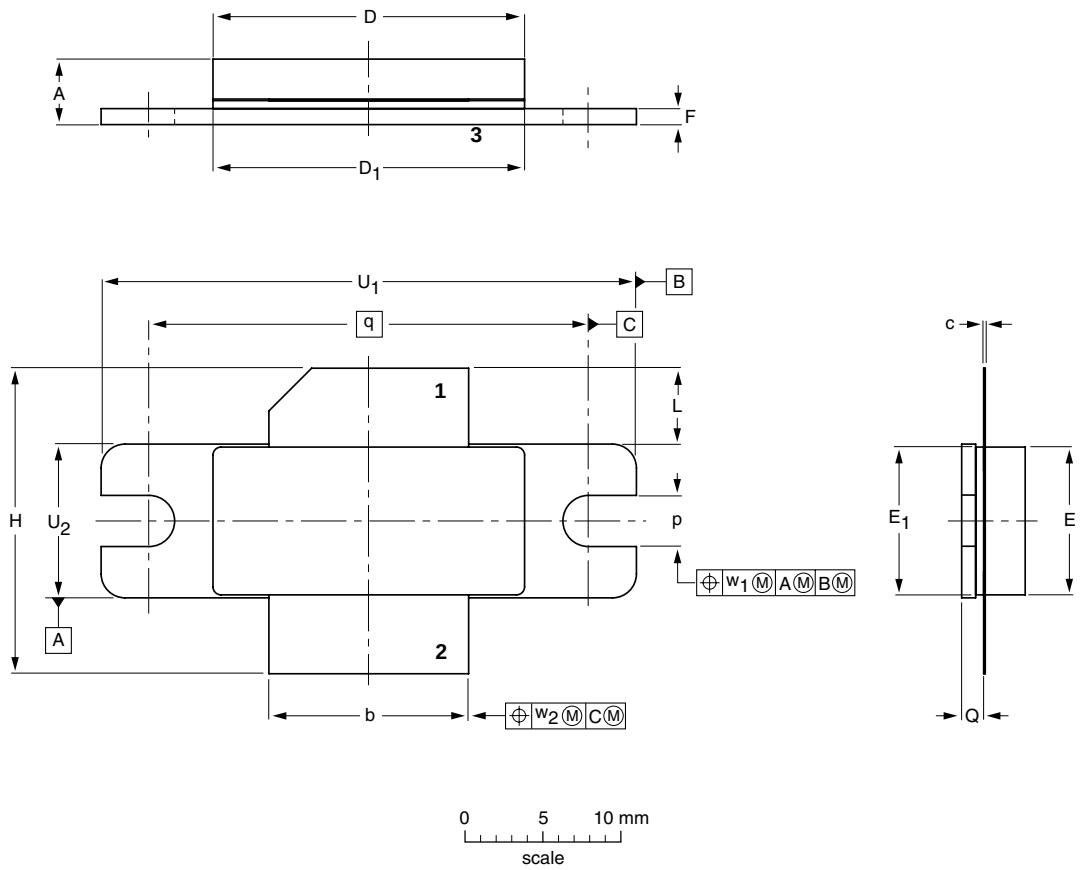

DIMENSIONS (millimetre dimensions are derived from the original inch dimensions)

UNIT	A	b	c	D	D_1	E	E_1	F	H	L	p	Q	q	U_1	U_2	w_1	w_2
mm	4.72 3.43	12.83 12.57	0.15 0.08	20.02 19.61	19.96 19.66	9.50 9.30	9.53 9.25	1.14 0.89	19.94 18.92	5.33 4.32	3.38 3.12	1.70 1.45	27.94	34.16 33.91	9.91 9.65	0.25	0.51
inches	0.186 0.135	0.505 0.495	0.006 0.003	0.788 0.772	0.786 0.774	0.374 0.366	0.375 0.364	0.045 0.035	0.785 0.745	0.210 0.170	0.133 0.123	0.067 0.057	1.100	1.345 1.335	0.390 0.380	0.01	0.02

OUTLINE VERSION	REFERENCES				EUROPEAN PROJECTION	ISSUE DATE
	IEC	JEDEC	JEITA			
SOT502A						~~99-12-28~~ 03-01-10

Fig 8. Package outline SOT502A

Earless flanged LDMOST ceramic package; 2 leads **SOT502B**

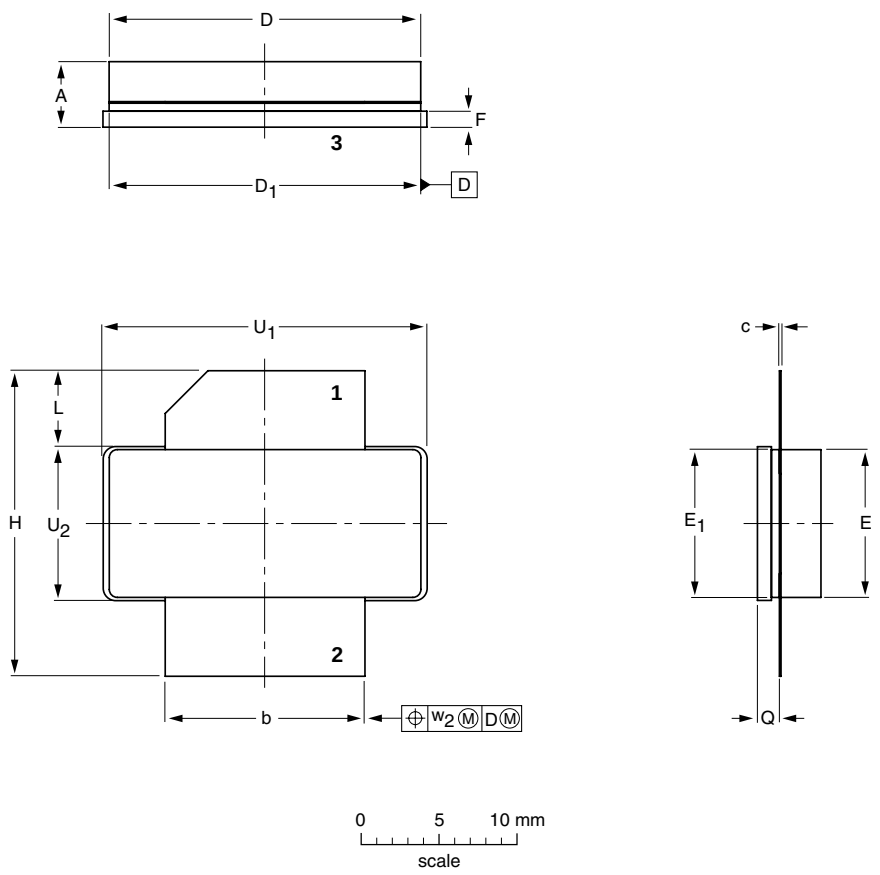

DIMENSIONS (millimetre dimensions are derived from the original inch dimensions)

UNIT	A	b	c	D	D_1	E	E_1	F	H	L	Q	U_1	U_2	w_2
mm	4.72 3.43	12.83 12.57	0.15 0.08	20.02 19.61	19.96 19.66	9.50 9.30	9.53 9.25	1.14 0.89	19.94 18.92	5.33 4.32	1.70 1.45	20.70 20.45	9.91 9.65	0.25
inches	0.186 0.135	0.505 0.495	0.006 0.003	0.788 0.772	0.786 0.774	0.374 0.366	0.375 0.364	0.045 0.035	0.785 0.745	0.210 0.170	0.067 0.057	0.815 0.805	0.390 0.380	0.010

OUTLINE VERSION	REFERENCES				EUROPEAN PROJECTION	ISSUE DATE
	IEC	JEDEC	JEITA			
SOT502B						~~03-01-10~~ 07-05-09

Fig 9. Package outline SOT502B

10. Abbreviations

Table 9. Abbreviations

Acronym	Description
3GPP	Third Generation Partnership Project
CCDF	Complementary Cumulative Distribution Function
CDMA	Code Division Multiple Access
CW	Continuous Wave
DPCH	Dedicated Physical CHannel
EDGE	Enhanced Data rates for GSM Evolution
GSM	Global System for Mobile communications
LDMOS	Laterally Diffused Metal-Oxide Semiconductor
LDMOST	Laterally Diffused Metal-Oxide Semiconductor Transistor
PAR	Peak-to-Average power Ratio
PDPCH	transmission Power of the Dedicated Physical CHannel
RF	Radio Frequency
SMD	Surface Mounted Device
VSWR	Voltage Standing-Wave Ratio
W-CDMA	Wideband Code Division Multiple Access

11. Revision history

Table 10. Revision history

Document ID	Release date	Data sheet status	Change notice	Supersedes
BLF6G10-200RN_10LS-200RN_2	20100121	Product data sheet	-	BLF6G10-200RN_10LS-200RN_1
Modifications	• Section 1.1 “General description” lower frequency range changed to 700 MHz. • Section 1.2 “Features” lower frequency range changed to 700 MHz. • Section 1.3 “Applications” lower frequency range changed to 700 MHz. • Section 12 “Legal information” export control disclaimer added.			
BLF6G10-200RN_10LS-200RN_1	20090119	Product data sheet	-	-

12. Legal information

12.1 Data sheet status

Document status[1][2]	Product status[3]	Definition
Objective [short] data sheet	Development	This document contains data from the objective specification for product development.
Preliminary [short] data sheet	Qualification	This document contains data from the preliminary specification.
Product [short] data sheet	Production	This document contains the product specification.

[1] Please consult the most recently issued document before initiating or completing a design.

[2] The term 'short data sheet' is explained in section "Definitions".

[3] The product status of device(s) described in this document may have changed since this document was published and may differ in case of multiple devices. The latest product status information is available on the Internet at URL http://www.nxp.com.

12.2 Definitions

Draft — The document is a draft version only. The content is still under internal review and subject to formal approval, which may result in modifications or additions. NXP Semiconductors does not give any representations or warranties as to the accuracy or completeness of information included herein and shall have no liability for the consequences of use of such information.

Short data sheet — A short data sheet is an extract from a full data sheet with the same product type number(s) and title. A short data sheet is intended for quick reference only and should not be relied upon to contain detailed and full information. For detailed and full information see the relevant full data sheet, which is available on request via the local NXP Semiconductors sales office. In case of any inconsistency or conflict with the short data sheet, the full data sheet shall prevail.

12.3 Disclaimers

General — Information in this document is believed to be accurate and reliable. However, NXP Semiconductors does not give any representations or warranties, expressed or implied, as to the accuracy or completeness of such information and shall have no liability for the consequences of use of such information.

Right to make changes — NXP Semiconductors reserves the right to make changes to information published in this document, including without limitation specifications and product descriptions, at any time and without notice. This document supersedes and replaces all information supplied prior to the publication hereof.

Suitability for use — NXP Semiconductors products are not designed, authorized or warranted to be suitable for use in medical, military, aircraft, space or life support equipment, nor in applications where failure or malfunction of an NXP Semiconductors product can reasonably be expected to result in personal injury, death or severe property or environmental damage. NXP Semiconductors accepts no liability for inclusion and/or use of NXP Semiconductors products in such equipment or applications and therefore such inclusion and/or use is at the customer's own risk.

Applications — Applications that are described herein for any of these products are for illustrative purposes only. NXP Semiconductors makes no representation or warranty that such applications will be suitable for the specified use without further testing or modification.

Limiting values — Stress above one or more limiting values (as defined in the Absolute Maximum Ratings System of IEC 60134) may cause permanent damage to the device. Limiting values are stress ratings only and operation of the device at these or any other conditions above those given in the Characteristics sections of this document is not implied. Exposure to limiting values for extended periods may affect device reliability.

Terms and conditions of sale — NXP Semiconductors products are sold subject to the general terms and conditions of commercial sale, as published at http://www.nxp.com/profile/terms, including those pertaining to warranty, intellectual property rights infringement and limitation of liability, unless explicitly otherwise agreed to in writing by NXP Semiconductors. In case of any inconsistency or conflict between information in this document and such terms and conditions, the latter will prevail.

No offer to sell or license — Nothing in this document may be interpreted or construed as an offer to sell products that is open for acceptance or the grant, conveyance or implication of any license under any copyrights, patents or other industrial or intellectual property rights.

Export control — This document as well as the item(s) described herein may be subject to export control regulations. Export might require a prior authorization from national authorities.

12.4 Trademarks

Notice: All referenced brands, product names, service names and trademarks are the property of their respective owners.

13. Contact information

For more information, please visit: **http://www.nxp.com**

For sales office addresses, please send an email to: **salesaddresses@nxp.com**

14. Contents

For more information, please visit: http://www.nxp.com
For sales office addresses, please send an email to: salesaddresses@nxp.com

Date of release: 21 January 2010
Document identifier: BLF6G10-200RN_10LS-200RN_2