Series PJS
microSD Card Reader - Hinge Type

Specifications

Insulation Resistance:	1,000MΩ min. at 500V DC
Withstanding Voltage:	500V ACrms for 1 minute
Contact Resistance:	80mΩ initial
Voltage Rating:	10V max.
Current Rating:	0.5A max.
Operating Temp. Range:	–25°C to +85°C
Mating Cycles:	10,000 insertions

Materials and Finish

Insulator:	LCP
Shielding Plate:	SUS
Contacts:	Base - Phosphor Bronze
	Mating area - Plating Ni-Au
	Solder area - Ni-Au

Features

- Easy handling due to hinged cover

.

Part Number (Details)

PJS 008T - 0000 - 0

Series No.

Number of Contacts

Design No.

Outline Dimensions for PJS008T-0000-0

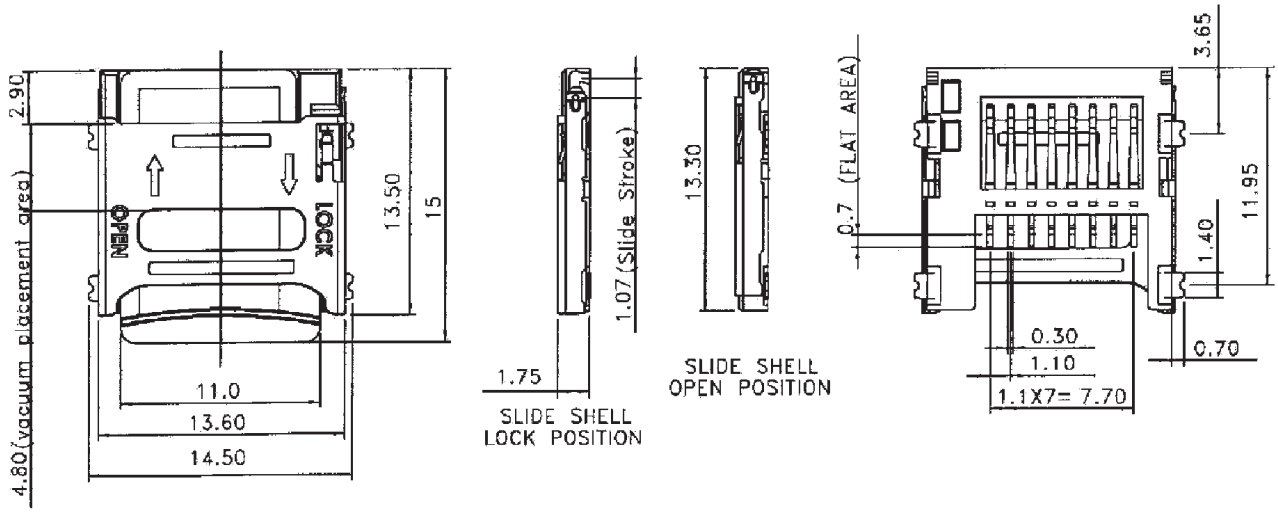

Recommended PCB Layout

Top View

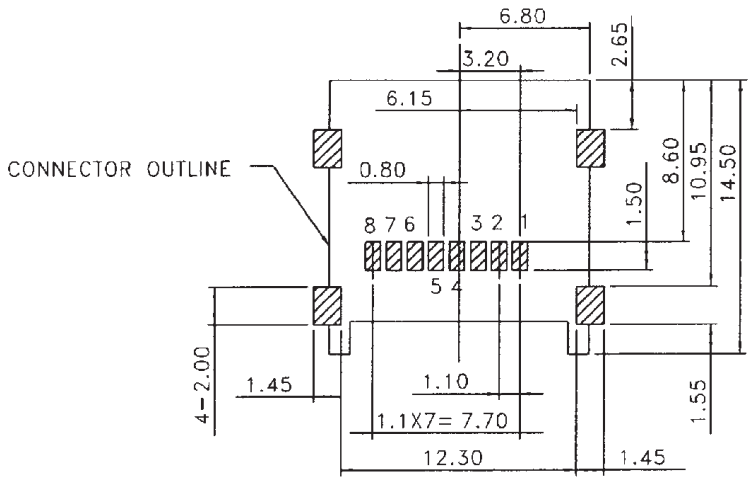

Circuit Schematic

Open position

Lock position