P/N	DESCRIPTION
SCHS–2	W/SPACER, W/O CLAMPING HARDWARE (NOTE 4)
SCH–2	W/O SPACER, W/O CLAMPING HARDWARE
SCHS–2–H	W/ SPACER, W/ CLAMPING HARDWARE
SCH–2–H	W/O SPACER, W/ CLAMPING HARDWARE

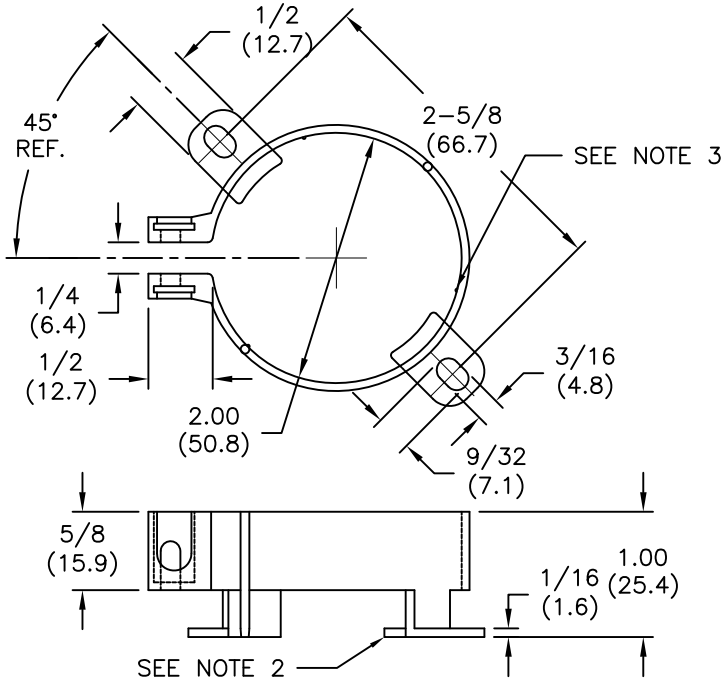

NOTES:

1. MATERIAL: GLASS–FILLED NYLON (RMS–18). COLOR: BLACK.
2. OPTIONAL INSIDE SPACER TO ELEVATE CAPACITOR 3/32 (2.4) FROM CHASSIS.
3. ANTI–ROTATION RIB (3 LOCATIONS)
4. CLAMPING HARDWARE:
   A) SCREW (S6B)–STAINLESS STEEL 1018 (RMS–357)
      PLATING: ZINC PLATED (RMS–358)
   B) QUICK NUT (QN–6)– SPRING STEEL C 1050 (RMS–327)
      COATING: BLACK PHOSPHATE (RMS–356)

REV	DESCRIPTION	ENGR DATE
F	SEE CO 200358 FOR CHANGES	SK 04.24.09
E	SEE ECN #1319 FOR CHANGES	SK 04.19.07
D	SEE ECN #1047 FOR CHANGES	SK 08.26.05
C	CORRECTED CLAMPING HARDWARE NOTE	SJ 04.11.02
B	ADDED PART NO. SCHS–2–H & SCH–2–H	SJ 03.26.02
A	P/N CORRECTED PER CATALOG.	J.L. 9.2.99

TITLE: STANDING CAPACITOR HOLDER

DWG IN IN(MM)

TOLERANCES UNLESS NOTED
.XX=±.010
.XXX=±.005
FRAC=±1/64
ANG=±1°

FILE # SCH
MAT'L: SEE NOTES
RE: RICHCO INC

DWN: J.B.
DT: 01–11–95
APP:
DT:

RICHCO INC.
PO BOX 804238,CHICAGO,60680
(773) 539–4060

FINAL

PART # SEE TABLE

PRINT TYPE CA