# 2N6790
# IRFF220

## MECHANICAL DATA
Dimensions in mm (inches)

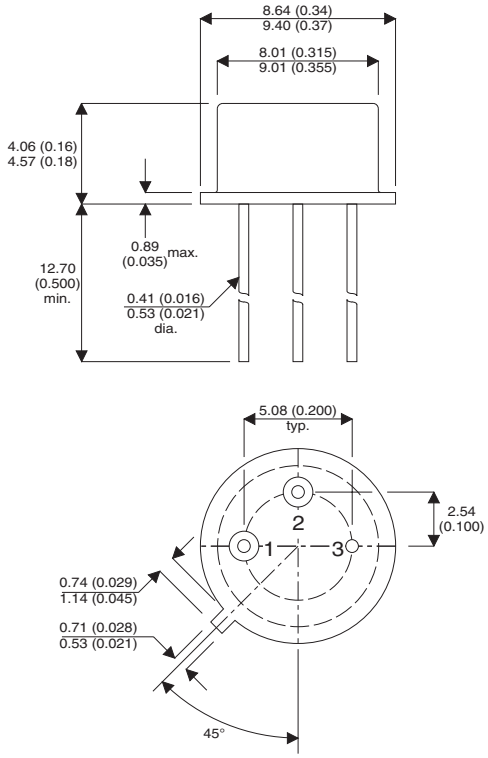


**TO39 Package (TO-205AF)**

**Underside View**

Pin 1 - Source  Pin 2 - Gate  Pin 3 - Drain and Case

# N–CHANNEL POWER MOSFET ENHANCEMENT MODE

## FEATURES
- **REPETITIVE AVALANCHE RATING**
- **SIMPLE DRIVE REQUIREMENTS**
- **HERMETICALLY SEALED**

## APPLICATIONS
- **FAST SWITCHING**
- **MOTOR CONTROLS**
- **POWER SUPPLIES**

## ABSOLUTE MAXIMUM RATINGS ($T_{case}$ = 25°C unless otherwise stated)

| | | |
|---|---|---|
| $V_{DS}$ | Drain Source Voltage | 200V |
| $I_D$ @$T_{case}$ = 25°C | Continuous Drain Current | 3.5A |
| $I_D$ @$T_{case}$ = 100°C | Continuous Drain Current | 2.25A |
| $I_{DM}$ | Pulsed Drain Current [1] | 14A |
| $V_{GS}$ | Gate Source Voltage | ±20V |
| $P_D$@ $T_{case}$ = 25°C | Maximum Power Dissipation | 20W |
| $R_{\theta J-C}$ | Thermal Resistance Junction To Case | 6.25°C/W |
| $R_{\theta J-A}$ | Thermal Resistance Junction To Ambient | 175°C/W |
| $T_J, T_{stg}$ | Operating and Storage Temperature Range | -55 to +150°C |
| Lead Temperature | ( 1.6mm from case for 10 secs) | 300°C |



**Semelab plc.** Telephone +44(0)1455 556565. Fax +44(0)1455 552612.
E-mail: sales@semelab.co.uk Website: http://www.semelab.co.uk

Document Number 6445
Issue 1

## ELECTRICAL CHARACTERISTICS ($T_{case}$ = 25°C unless otherwise stated)

| | Parameter | Test Conditions | | Min. | Typ. | Max. | Unit |
|---|---|---|---|---|---|---|---|
| | **STATIC ELECTRICAL RATINGS** | | | | | | |
| $BV_{DSS}$ | Drain – Source Breakdown Voltage | $V_{GS}$ = 0 | $I_D$ = 1.0mA | 200 | | | V |
| $V_{GS(th)}$* | Gate Threshold Voltage | $V_{DS}$ = $V_{GS}$ | $I_D$ = 250µA | 2.0 | | 4.0 | |
| $I_{GSSF}$ | Gate Body Leakage Forward | $V_{GS}$ = 20V | | | | 100 | nA |
| $I_{GSSR}$ | Gate Body Leakage Reverse | $V_{GS}$ = -20V | | | | -100 | |
| $I_{DSS}$ | Zero Gate Voltage Drain Current | $V_{DS}$ = 160V. | $V_{GS}$ =0 | | | 25 | µA |
| | | | $T_C$ = 125°C | | | 250 | |
| $R_{DS(on)}$* | Static Drain Source On-State Resistance | $V_{GS}$ = 10V | $I_D$ = 2.25A | | | 0.80 | Ω |
| | | $V_{GS}$ = 10V | $I_D$ = 3.5A | | | 0.92 | |
| gfs* | Forward Transconductance | $V_{DS}$ = 15V | $I_{DS}$ = 2.25A | 1.5 | | | S (℧) |
| | **DYNAMIC CHARACTERISTICS** | | | | | | |
| $C_{iss}$ | Input Capacitance | $V_{GS}$ = 0 | $V_{DS}$ = 25V | | 260 | | pF |
| $C_{oss}$ | Output Capacitance | f = 1.0MHz | | | 100 | | |
| $C_{rss}$ | Reverse Transfer Capacitance | | | | 30 | | |
| $t_{d(on)}$ | Turn–On Delay Time | $V_{DD}$ = 100V | $I_D$ = 3.5A | | | 40 | ns |
| $t_r$ | Rise Time | $R_G$ = 7.5Ω | | | | 50 | |
| $t_{d(off)}$ | Turn–Off Delay Time | (MOSFET switching times are essentially | | | | 50 | |
| $t_f$ | Fall Time | independent of operating temperature.) | | | | 50 | |
| $Q_g$ | Total Gate Charge | $V_{GS}$ = 10V | $I_D$ = 3.5A | 8.0 | | 14.3 | nC |
| $Q_{gs}$ | Gate To Source Charge | $V_{DS}$ = 100V | | 0.9 | | 3.0 | |
| $Q_{gd}$ | Gate To Drain ("Miller") Charge | | | 2.3 | | 9.0 | |
| | **BODY– DRAIN DIODE RATINGS & CHARACTERISTICS** | | | | | | |
| $I_S$ | Continuous Source Current (Body Diode) | Modified MOS POWER symbol showing the intergal P-N junction rectifier. 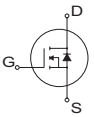 | | | | 3.5 | A |
| $I_{SM}$ | Source Current (Body Diode) | | | | | 14 | |
| $V_{SD}$ | Diode Forward Voltage* | $I_S$ = 3.5A<br>$T_J$ = 25°C | $V_{GS}$ = 0 | | | 1.5 | V |
| $t_{rr}$ | Reverse Recovery Time | $I_F$ = 3.5A | $T_J$ = 25°C | | | 400 | ns |
| $Q_{RR}$ | Reverse Recovery Charge | $d_i$ / $d_t$ = 100A/µs | $V_{DD}$ = 50V | | | 4.3 | µC |

**Notes**

* Pulse Test: Pulse Width ≤ 300µs, δ ≤ 2%



**Semelab plc.** Telephone +44(0)1455 556565. Fax +44(0)1455 552612.
E-mail: sales@semelab.co.uk Website: http://www.semelab.co.uk