molex
one company › a world of innovation

This document was generated on 05/19/2010

PLEASE CHECK WWW.MOLEX.COM FOR LATEST PART INFORMATION

Part Number: 0334861603

Status: Active

Overview: mx150_sealed_connector_system

Description: 3.50mm (.138") Pitch MX150™ Hybrid Sealed Male Connector, Dual Row, 16 Circuits, Polarization C, without Connector Position Assurance, Brown

Series

image - Reference only

Documents:

3D Model
Application Specification (PDF)
Drawing (PDF)
Product Specification PS-33476-000 (PDF)
RoHS Certificate of Compliance (PDF)

General

Product Family	Crimp Housings
Series	33486
Comments	No Connector Position Assurance (CPA), Hybrid
More Detailed Tech Information	http://ewcap.uscarteams.org
Overview	mx150_sealed_connector_system
Product Name	MX150™

Physical

Circuits (maximum)	16
Circuits Detail	16
Color - Resin	Black, Brown, Natural
Gender	Male
Glow-Wire Compliant	No
Keying to Mating Part	Yes
Lock to Mating Part	Yes
Material - Resin	Modified Polystyrene Alloy
Number of Rows	2
Packaging Type	Bag
Panel Mount	No
Pitch - Mating Interface (in)	0.138 In
Pitch - Mating Interface (mm)	3.50 mm
Polarized to Mating Part	Yes
Stackable	No
Temperature Range - Operating	-40°C to +125°C

Electrical

Current - Maximum per Contact	22A

Material Info

Reference - Drawing Numbers

Application Specification	AS-33472-100
Packaging Specification	PK-31300-514
Product Specification	PS-33476-000
Sales Drawing	SD-33486-161

EU RoHS
ELV and RoHS Compliant
REACH SVHC
Contains SVHC: No
Halogen-Free Status
Halogen-Free

China RoHS

Need more information on product environmental compliance?

Email productcompliance@molex.com
For a multiple part number RoHS Certificate of Compliance, click here

Please visit the Contact Us section for any non-product compliance questions.

Search Parts in this Series
33486Series

Mates With
33476 Female Dual Row Hybrid Sealed Connector

Use With
33000 MX150™ Tin (Sn) Male Terminal,
33011 Gold (Au) Male Terminal

This document was generated on 05/19/2010

PLEASE CHECK WWW.MOLEX.COM FOR LATEST PART INFORMATION

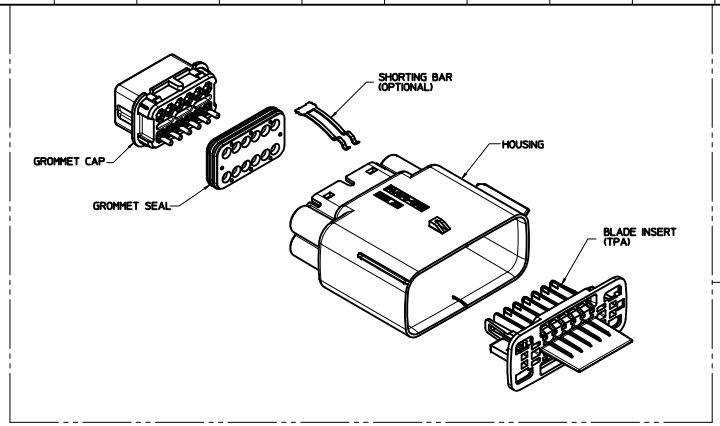

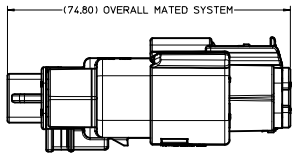

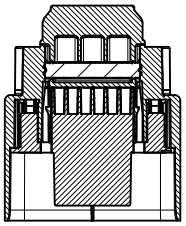

SECTION A-A

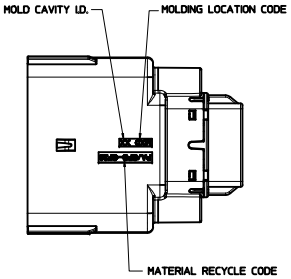

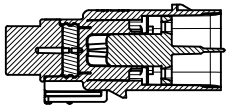

SECTION B-B
INSERT SHOWN IN PRE-LOCK POSITION
SEE NOTE 2

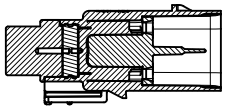

SECTION B-B
INSERT SHOWN IN FINAL LOCK POSITION
SEE NOTE 2

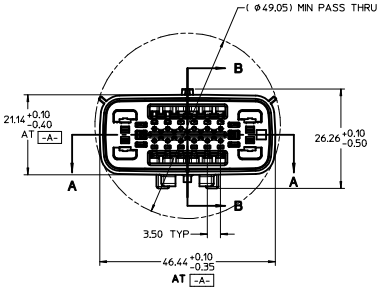

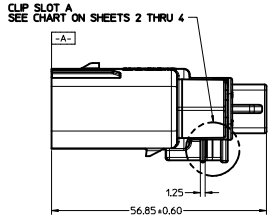

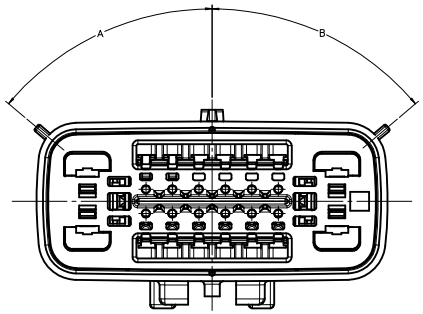

KEYING OPTION
SEE TABLE
SCALE 4:1

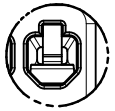

DETAIL1
SCALE 10:1
USE ONLY BLADE TERMINAL P/N 31296-0008
FOR ALL SHORTING BAR APPLICATIONS
INSERT SHORTING BAR BLADE TERMINALS INTO
GROMMET CAP OPENINGS AS SHOWN ABOVE

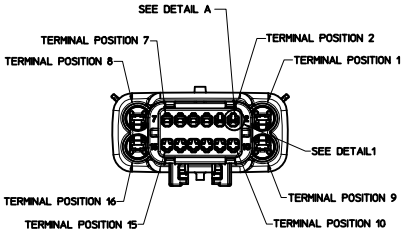

REAR VIEW
WIRE HARNESS SIDE

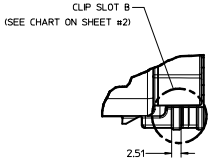

APPLIES TO 33486-1721 THRU 1729,
33486-1761, 33486-1764, AND 33486-1765 ONLY
SCALE 2:1

NOTES: UNLESS OTHERWISE STATED

1. DESIGNED TO MATE WITH RECEPTACLE HOUSING ASSEMBLY SPECIFIED IN DRAWING SD-33476-161.
2. ASSEMBLY SHIPPED WITH BLADE INSERT IN PRE-LOCKED POSITION (SEE SECTION B-B PRE-LOCK). UPON FULL TERMINAL ASSEMBLY, EACH BLADE INSERT MUST BE SNAPPED INTO ITS FINAL-LOCK POSITION. FORCE TO MOVE TPA FROM FINAL LOCK TO PRE-LOCK POSITION: 75 N MAX.
3. FOR 1.5mm BLADE TERMINALS TO BE USED WITH THIS ASSEMBLY SEE MOLEX DRAWING SD-33000-001. FOR 2.8mm RECEPTACLE TERMINALS SEE TABLE.
4. SYSTEM TO BE USED WITH WIRE WITHIN RANGE OF 1.5mm TO 2.5mm.
5. MATERIAL: SPS/NYLON BLEND, 20% GLASS FILLED.
6. FOR ASSEMBLIES W/SHORTING BARS, ASSEMBLE SHORTING BARS PER SPECIFICATION E-33546-001
7. SHORTING BAR TERMINAL CRIMP ANGLE MUST BE BETWEEN -1.4 DEG. AND +3.5 DEG. AFTER INSTALLATION INTO THE CONNECTOR ASSEMBLY. REFER TO MOLEX DRAWING SD-31296-001 FOR DETAILS.
8. SHALL CONFORM TO PACKAGING SPECIFICATION PK-31300-514.
9. SHALL CONFORM TO PRODUCT SPECIFICATION PS-33476-000.
10. ASSEMBLY CONFORMS TO SAE/USCAR-2 REV. 4 WITH THE FOLLOWING EXCEPTIONS: 14 AWG TERMINAL INSERTION FORCES SHALL NOT EXCEED 42 NEWTONS.

TYCO 2.8mm CABLE SEAL TERMINAL	
FORD P/N MALE BLADE	GRIP SIZE
3F2T-14421-GA	12
IFIT-14421-JA	14
IFIT-14421-HA	16
IFIT-14421-GA	18
IFIT-14421-FA	20
IFIT-14421-EA	22

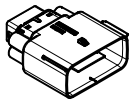

SCALE 1:1

ENTER DESCRIPTION
EEC NO: UAU2010-1801
DRWN:DGRIFFITHS 2010/06/01
CHKD:DGRIFFITHS 07-09-02
APPR:VKOSHY 2010/06/04
DESCRIPTION
REV BU1

QUALITY SYMBOLS
=0
=0
=0

GENERAL TOLERANCES (UNLESS SPECIFIED)

	mm	INCH
4 PLACES	± ---	± ---
3 PLACES	± ---	± ---
2 PLACES	± 0.10	± ---
1 PLACE	± 0.3	± ---
ANGULAR ± 3 °		

DRAFT WHERE APPLICABLE MUST REMAIN WITHIN DIMENSIONS

DIMENSION STYLE: MM ONLY
SCALE: 2:1
DESIGN UNITS: METRIC
THIRD ANGLE PROJECTION

		DATE
DRAWN BY	JWESLEY	06-16-02
CHECKED BY	DGRIFFITHS	07-09-02
APPROVED BY	VKOSHY	2010/04/06

MATERIAL NO. SEE CHART

TITLE: 1.5MM/2.8MM HYBRID CONNECTOR, BLADE 2 ROW HOUSING, SEALED, 16 WAY

molex MOLEX INCORPORATED

DOCUMENT NO. SD-33486-161

SHEET NO. 1 OF 4

SIZE E

THIS DRAWING CONTAINS INFORMATION THAT IS PROPRIETARY TO MOLEX INCORPORATED AND SHOULD NOT BE USED WITHOUT WRITTEN PERMISSION

ASSEMBLY PART NUMBER	COLOR	KEYING OPTION	DIMENSIONS IN DEGREES		CAVITY TYPE & STATUS (X = PLUGGED, SB = SHORTING BAR)												SHORTING BAR	SB QTY	CLIPSLOT TYPE	STATUS
			A	B	2	3	4	5	6	7	10	11	12	13	14	15				
33486-1601	BLACK	A	50	50													-	-	A	
33486-1602	LT.GRAY	B	15	50													-	-	A	
33486-1603	BROWN	C	50	15													-	-	A	
33486-1604	GREEN	D	15	15													-	-	A	
33486-1605	YELLOW	A	50	50													-	-	A	
33486-1606	BLACK	A	50	50	X												-	-	A	
33486-1607	LT.GRAY	B	15	50	X												-	-	A	
33486-1608	BROWN	C	50	15	X												-	-	A	
33486-1609	GREEN	D	15	15	X												-	-	A	
33486-1610	YELLOW	A	50	50											X		-	-	A	
33486-1611	BLACK	A	50	50	X											X	-	-	A	
33486-1612	LT.GRAY	B	15	50	X											X	-	-	A	
33486-1613	BROWN	C	50	15	X											X	-	-	A	
33486-1614	GREEN	D	15	15	X											X	-	-	A	
33486-1615	YELLOW	A	50	50					X	X	X	X			X		-	-	A	
33486-1621	BLACK	A	50	50	X	X	X	X	X	X	X	X	X	X	X	X	-	-	A	
33486-1626	BLACK	A	50	50	X	X			X								-	-	A	
33486-1631	BLACK	A	50	50		X			X								-	-	A	
33486-1636	BLACK	A	50	50					X								-	-	A	
33486-1641	BLACK	A	50	50						X				X			-	-	A	
33486-1646	BLACK	A	50	50	X	X			X	X				X			-	-	A	
33486-1651	BLACK	A	50	50					X	X				X			-	-	A	
33486-1656	BLACK	A	50	50		X			X			X					-	-	A	
33486-1661	BLACK	A	50	50		X			X			X	X				-	-	A	
33486-1666	BLACK	A	50	50		X			X			X				X	-	-	A	
33486-1671	BLACK	A	50	50		X			X			X	X			X	-	-	A	
33486-1672	BLACK	A	50	50		X			X				X				-	-	A	
33486-1701	BLACK	E	32.5	32.5			SB	SB					SB	SB			YES	2	A	
33486-1702	LT.GRAY	F	15	32.5			SB	SB					SB	SB			YES	2	A	
33486-1703	BROWN	G	32.5	15			SB	SB					SB	SB			YES	2	A	
33486-1704	YELLOW	H	50	32.5			SB	SB					SB	SB			YES	2	A	SALEABLE
33486-1708	YELLOW	H	50	32.5	X		SB	SB					SB	SB		X	YES	2	A	
33486-1710	YELLOW	H	50	32.5		X	SB	SB	X	X	X	X	SB	SB	X		YES	2	A	
33486-1712	YELLOW	H	50	32.5	X	X	SB	SB	X	X	X	X	SB	SB	X	X	YES	2	A	
33486-1714	BLACK	E	32.5	32.5			SB	SB									YES	1	A	
33486-1715	LT.GRAY	B	15	50			X						X				-	-	A	
33486-1716	BLACK	A	50	50			X						X				-	-	A	
33486-1717	BLACK	A	50	50	X						X		X	X	X	X	-	-	A	
33486-1718	BLACK	A	50	50	X	X					X		X	X	X	X	-	-	A	
33486-1719	BLACK	A	50	50	X		X			X						X	-	-	A	
33486-1720	BLACK	A	50	50	X					X	X				X		-	-	A	
33486-1721	LT.GRAY	F	15	32.5	X	X	SB	SB	X	X				X	X	X	YES	1	B	
33486-1722	LT.GRAY	F	15	32.5			SB	SB	X								YES	1	B	
33486-1723	LT.GRAY	F	15	32.5	X	X	SB	SB	X					X			YES	1	B	
33486-1724	LT.GRAY	F	15	32.5			SB	SB	X					X			YES	1	B	
33486-1725	LT.GRAY	F	15	32.5	X		SB	SB	X		X	X	X				YES	1	B	
33486-1726	LT.GRAY	F	15	32.5			SB	SB	X				X				YES	1	B	
33486-1727	LT.GRAY	F	15	32.5			SB	SB			X						YES	1	B	
33486-1728	LT.GRAY	F	15	32.5	X	X	SB	SB	X		X						YES	1	B	
33486-1729	LT.GRAY	F	15	32.5	X	X	X	X	X		X						-	-	B	
33486-1731	LT.GRAY	F	15	32.5			SB	SB									YES	1	A	
33486-1732	BLACK	A	50	50	X	X	X					X	X		X		-	-	A	
33486-1733	BLACK	E	32.5	32.5			SB	SB	SB	SB	SB	SB	SB	SB			YES	4	A	
33486-1734	BLACK	E	32.5	32.5		X	SB	SB	SB	SB		X	SB	SB	X	X	YES	3	A	
33486-1739	BLACK	E	32.5	32.5			SB	SB			X	X	SB	SB	X		YES	2	A	
33486-1740	BLACK	E	32.5	32.5			SB	SB	X	X	X	X	SB	SB	X		YES	2	A	
33486-1741	BLACK	E	32.5	32.5			SB	SB					SB	SB	X	X	YES	2	A	
33486-1742	BLACK	E	32.5	32.5			SB	SB					SB	SB	X		YES	2	A	
33486-1743	BLACK	A	50	50				X	X								-	-	A	
33486-1744	BLACK	A	50	50				X	X					X	X	X	-	-	A	
33486-1745	BLACK	A	50	50		X			X			X			X		-	-	A	
33486-1746	BLACK	A	50	50					X			X			X		-	-	A	
33486-1747	BLACK	A	50	50	X	X			X			X			X	X	-	-	A	
33486-1748	BLACK	A	50	50	X				X			X			X	X	-	-	A	
33486-1749	BLACK	A	50	50					X		X	X	X	X	X	X	-	-	A	
33486-1750	BLACK	A	50	50								X	X	X	X	X	-	-	A	
33486-1751	LT.GRAY	B	15	50				X						X	X	X	-	-	A	
33486-1752	LT.GRAY	B	15	50				X						X	X		-	-	A	
33486-1753	BLACK	E	32.5	32.5	X		SB	SB					SB	SB		X	YES	2	A	
33486-1754	BLACK	A	50	50	X					X	X	X					-	-	A	
33486-1755	BLACK	A	50	50	X					X				X		X	-	-	A	
33486-1756	BLACK	A	50	50		X			X	X				X			-	-	A	
33486-1757	BLACK	A	50	50	X	X			X								-	-	A	
33486-1758	BLACK	A	50	50	X	X			X						X		-	-	A	
33486-1759	BLACK	E	32.5	32.5	X	X	SB	SB	SB	SB			SB	SB	X	X	YES	3	A	
33486-1760	BLACK	E	32.5	32.5			SB	SB	SB	SB			SB	SB			YES	3	A	
33486-1761	LT.GRAY	F	15	32.5			SB	SB					X	X	X		YES	1	B	
33486-1762	YELLOW	H	50	32.5			SB	SB					SB	SB			YES	2	A	
33486-1763	YELLOW	H	50	32.5			SB	SB					SB	SB	X		YES	2	A	
33486-1764	LT.GRAY	F	15	32.5			SB	SB	X	X	X	X	X	X	X		YES	1	B	
33486-1765	LT.GRAY	F	15	32.5			SB	SB	X		X	X	X	X	X		YES	1	B	
33486-1766	YELLOW	H	50	32.5			SB	SB	X	X	X	X	SB	SB	X		YES	2	A	
33486-1767	YELLOW	H	50	32.5			SB	SB	X		X	X	SB	SB	X		YES	2	A	
33486-1768	BLACK	A	50	50		X		X	X			X				X	-	-	A	
33486-1769	BLACK	A	50	50					X						X		-	-	A	
33486-1770	BLACK	A	50	50						X			X	X	X	X	-	-	A	
33486-1771	BLACK	A	50	50	X					X			X	X	X	X	-	-	A	
33486-1772	YELLOW	H	50	32.5			SB	SB					X	X			YES	1	A	
33486-1773	YELLOW	H	50	32.5	X		SB	SB					X	X		X	YES	1	A	
33486-1774	YELLOW	H	50	32.5		X	SB	SB	X	X	X	X	X	X	X		YES	1	A	
33486-1775	YELLOW	H	50	32.5	X	X	SB	SB	X	X	X	X	X	X	X	X	YES	1	A	
33486-1776	BLACK	A	50	50	X	X					X	X			X	X	-	-	A	
33486-1777	BLACK	A	50	50	X	X				X	X	X	X		X	X	-	-	A	
33486-1778	BLACK	A	50	50	X		X	X	X	X	X	X	X		X	X	-	-	A	
33486-1779	BLACK	A	50	50	X	X										X	-	-	A	
33486-1780	BLACK	A	50	50	X		X			X	X	X		X		X	-	-	A	
33486-1781	BLACK	A	50	50	X	X		X			X			X		X	-	-	A	
33486-1782	BLACK	E	32.5	32.5			SB	SB	SB	SB			SB	SB	X	X	YES	3	A	
33486-1783	BLACK	A	50	50	X	X						X	X		X		-	-	A	
33486-1784	BLACK	A	50	50	X							X			X	X	-	-	A	
33486-1785	BLACK	A	50	50	X							X	X		X	X	-	-	A	

ENTER DESCRIPTION
EEC NO: UAU2010-1801
DRWN:DGRIFFITHS 2010/06/01
CHKD:DGRIFFITHS 07-09-02
APPR:VKOSHY 2010/06/04
DESCRIPTION
BU1
REV

QUALITY SYMBOLS

GENERAL TOLERANCES (UNLESS SPECIFIED)

	mm	INCH
4 PLACES	± ---	± ---
3 PLACES	± ---	± ---
2 PLACES	± 0.10	± ---
1 PLACE	± 0.3	± ---
ANGULAR ± 3 °		

DRAFT WHERE APPLICABLE MUST REMAIN WITHIN DIMENSIONS

DIMENSION STYLE: MM ONLY
SCALE: 2:1
DESIGN UNITS: METRIC
THIRD ANGLE PROJECTION

DRAWN BY: JWESLEY DATE: 06-16-02
CHECKED BY: DGRIFFITHS DATE: 07-09-02
APPROVED BY: VKOSHY DATE: 2010/04/06

TITLE: 1.5MM/2.8MM HYBRID CONNECTOR, BLADE 2 ROW HOUSING, SEALED, 16 WAY

MOLEX INCORPORATED

MATERIAL NO.: SEE CHART
DOCUMENT NO.: SD-33486-161
SHEET NO.: 2 OF 4
SIZE: E

THIS DRAWING CONTAINS INFORMATION THAT IS PROPRIETARY TO MOLEX INCORPORATED AND SHOULD NOT BE USED WITHOUT WRITTEN PERMISSION

ASSEMBLY PART NUMBER	COLOR	KEYING OPTION	DIMENSIONS IN DEGREES		CAVITY TYPE & STATUS (X = PLUGGED, SB = SHORTING BAR)													SHORTING BAR	SB QTY	CLIPSLOT TYPE	STATUS
			A	B	2	3	4	5	6	7	10	11	12	13	14	15					
33486-1786	BLACK	A	50	50	X					X		X	X					-	-	A	
33486-1787	BLACK	A	50	50	X							X						-	-	A	
33486-1788	BLACK	A	50	50		X					X							-	-	A	
33486-1789	BLACK	A	50	50						X								-	-	A	
33486-1790	BLACK	A	50	50	X		X			X				X		X		-	-	A	
33486-1791	BLACK	A	50	50	X		X			X			X			X		-	-	A	
33486-1792	BLACK	A	50	50		X			X			X	X	X	X			-	-	A	
33486-1793	BLACK	A	50	50									X	X	X			-	-	A	
33486-1794	BLACK	A	50	50		X			X	X			X					-	-	A	
33486-1795	BLACK	A	50	50	X		X									X		-	-	A	
33486-1796	BLACK	A	50	50				X	X			X				X		-	-	A	
33486-1797	BLACK	A	50	50								X	X	X				-	-	A	
33486-1798	BLACK	A	50	50		X			X					X		X		-	-	A	
33486-1799	BLACK	A	50	50	X	X			X					X		X		-	-	A	
33486-1801	BLACK	A	50	50	X	X	X			X	X	X		X	X	X		-	-	A	
33486-1802	BLACK	A	50	50	X								X					-	-	A	
33486-1803	BLACK	A	50	50		X	X	X										-	-	A	
33486-1804	BLACK	A	50	50		X	X	X			X	X	X	X	X	X		-	-	A	
33486-1805	BLACK	A	50	50				X										-	-	A	
33486-1806	BLACK	A	50	50								X						-	-	A	
33486-1807	BLACK	A	50	50	X	X				X	X	X						-	-	A	
33486-1808	YELLOW	A	50	50					X		X	X			X			-	-	A	
33486-1809	LT.GRAY	B	15	50									X	X	X			-	-	A	
33486-1810	LT.GRAY	B	15	50					X	X	X	X	X	X	X			-	-	A	
33486-1811	LT.GRAY	B	15	50					X		X	X	X	X	X			-	-	A	
33486-1812	BLACK	A	50	50	X	X			X			X						-	-	A	
33486-1813	BLACK	A	50	50	X	X	X	X	X		X	X	X		X	X		-	-	A	
33486-1814	BLACK	A	50	50	X	X			X	X		X		X				-	-	A	
33486-1815	BLACK	A	50	50		X	X		X	X	X	X	X	X	X	X		-	-	A	
33486-1816	BLACK	A	50	50	X				X	X	X	X		X		X		-	-	A	
33486-1817	BLACK	A	50	50	X			X	X	X	X	X		X		X		-	-	A	
33486-1818	BLACK	A	50	50	X				X	X		X		X		X		-	-	A	
33486-1819	BLACK	A	50	50	X			X	X	X		X		X		X		-	-	A	
33486-1820	BLACK	A	50	50	X					X		X	X		X	X		-	-	A	
33486-1821	BLACK	A	50	50					X			X		X	X			-	-	A	
33486-1822	BLACK	A	50	50					X					X				-	-	A	
33486-1823	BLACK	A	50	50					X			X		X	X	X		-	-	A	
33486-1824	BLACK	E	32.5	32.5			SB	SB	SB	SB	SB	SB	SB	SB	X	X		YES	4	A	
33486-1825	BLACK	A	50	50										X	X			-	-	A	
33486-1826	BLACK	A	50	50		X			X			X	X	X	X	X		-	-	A	
33486-1827	BLACK	A	50	50	X					X	X	X	X			X		-	-	A	
33486-1828	BLACK	A	50	50											X	X		-	-	A	
33486-1829	BLACK	A	50	50									X		X	X		-	-	A	
33486-1830	BLACK	A	50	50					X					X		X		-	-	A	
33486-1831	BLACK	E	32.5	32.5	X	X	SB	SB					SB	SB	X	X		YES	2	A	
33486-1832	BLACK	A	50	50							X	X	X	X	X	X		-	-	A	
33486-1833	BLACK	A	50	50					X	X								-	-	A	
33486-1834	LT.GRAY	B	15	50		X	X	X										-	-	A	
33486-1835	LT.GRAY	B	15	50		X	X	X			X	X	X	X	X	X		-	-	A	
33486-1836	LT.GRAY	B	15	50				X										-	-	A	
33486-1837	BLACK	A	50	50		X					X	X						-	-	A	
33486-1838	BLACK	E	32.5	32.5							X	X			X			-	-	A	
33486-1839	BLACK	E	32.5	32.5					X	X	X	X			X			-	-	A	
33486-1840	YELLOW	H	50	32.5	SB	SB	SB	SB	SB	SB	SB	SB	SB	SB				YES	5	A	
33486-1841	BLACK	A	50	50											X			-	-	A	
33486-1842	BLACK	A	50	50									X					-	-	A	
33486-1843	BLACK	A	50	50				X			X		X					-	-	A	
33486-1844	BLACK	A	50	50	X		X						X					-	-	A	
33486-1845	BLACK	A	50	50						X				X	X	X		-	-	A	
33486-1846	BLACK	A	50	50	X	X	X	X	X	X		X	X	X	X	X		-	-	A	
33486-1847	BLACK	A	50	50	X	X	X	X					X	X	X	X		-	-	A	
33486-1848	BLACK	A	50	50	X	X	X	X				X	X	X	X	X		-	-	A	
33486-1849	BLACK	A	50	50				X	X	X				X	X	X		-	-	A	
33486-1850	BLACK	A	50	50	X			X	X	X	X			X	X	X		-	-	A	
33486-1851	BLACK	A	50	50	X					X	X			X	X	X		-	-	A	
33486-1852	BLACK	A	50	50	X	X	X			X	X	X	X	X	X	X		-	-	A	
33486-1853	BLACK	A	50	50		X	X	X	X	X		X	X	X	X	X		-	-	A	
33486-1854	BLACK	A	50	50	X		X	X			X		X					-	-	A	
33486-1855	BLACK	A	50	50	X	X					X							-	-	A	
33486-1856	BLACK	A	50	50	X					X	X	X		X		X		-	-	A	
33486-1857	BLACK	A	50	50									X	X	X	X		-	-	A	
33486-1858	BLACK	A	50	50										X	X	X		-	-	A	
33486-1859	BLACK	A	50	50		X					X			X	X	X		-	-	A	
33486-1860	BLACK	A	50	50		X					X	X		X	X	X		-	-	A	
33486-1861	BLACK	A	50	50	X	X	X	X	X	X			X	X	X	X		-	-	A	
33486-1862	BLACK	A	50	50	X		X			X				X	X	X		-	-	A	
33486-1863	BLACK	A	50	50	X					X				X	X	X		-	-	A	
33486-1864	BLACK	A	50	50		X	X			X	X	X		X	X	X		-	-	A	
33486-1865	BLACK	A	50	50		X	X			X	X	X	X	X	X	X		-	-	A	
33486-1866	BLACK	A	50	50		X	X		X	X	X	X		X	X	X		-	-	A	
33486-1867	BLACK	A	50	50					X				X					-	-	A	
33486-1868	BLACK	A	50	50		X			X	X								-	-	A	
33486-1869	BLACK	A	50	50	X					X					X			-	-	A	
33486-1870	BLACK	A	50	50	X				X				X					-	-	A	
33486-1871	BLACK	E	32.5	32.5	X	X	SB	SB	X	X	X	X	SB	SB	X	X		YES	2	A	
33486-1872	BLACK	A	50	50		X					X	X	X	X	X	X		-		A	
33486-1873	YELLOW	H	50	32.5	X	X	SB	SB	X	X	X	X	X	X	X			YES	1	A	
33486-1874	YELLOW	H	50	32.5			SB	SB	X	X	X	X	X	X				YES	1	A	
33486-1875	YELLOW	H	50	32.5	X	X	SB	SB	X	X			X	X	X			YES	1	A	
33486-1876	YELLOW	H	50	32.5	X	X	SB	SB	X	X			X	X	X	X		YES	1	A	
33486-1877	YELLOW	H	50	32.5	X	X	SB	SB			X	X	X	X	X	X		YES	1	A	
33486-1878	YELLOW	H	50	32.5	X	X	SB	SB					X	X	X	X		YES	1	A	
33486-1879	YELLOW	H	50	32.5			SB	SB			X	X	X	X				YES	1	A	
33486-1880	YELLOW	H	50	32.5			SB	SB			X	X	X	X	X	X		YES	1	A	
33486-1881	YELLOW	H	50	32.5			SB	SB					X	X	X	X		YES	1	A	
33486-1882	LT.GRAY	B	15	50							X	X	X	X	X	X		-	-	A	
33486-1883	BLACK	A	50	50	X					X	X	X	X	X				-	-	A	
33486-1884	YELLOW	H	50	32.5			SB	SB										YES	1	A	
33486-1885	YELLOW	H	50	32.5			SB	SB	X	X	X	X						YES	1	A	
33486-1886	BLACK	A	50	50	X	X	X			X					X			-	-	A	
33486-1887	BLACK	A	50	50						X	X	X						-	-	A	
33486-1888	BLACK	A	50	50					X	X	X	X	X	X	X	X		-	-	A	
33486-1889	BLACK	A	50	50	X						X	X	X	X	X			-	-	A	
33486-1890	BLACK	A	50	50	X						X	X	X	X				-	-	A	
33486-1891	BLACK	A	50	50	X						X	X	X					-	-	A	
33486-1892	BLACK	A	50	50							X	X	X	X				-	-	A	
33486-1893	BLACK	A	50	50	X				X	X	X	X	X	X	X	X		-	-	A	
33486-1894	BLACK	A	50	50	X	X	X	X	X		X	X	X	X	X	X		-	-	A	
33486-1895	BLACK	A	50	50	X	X	X		X	X	X	X	X	X	X	X		-	-	A	
33486-1900	BLACK	A	50	50	X	X												-	-	A	
33486-1901	BLACK	A	50	50		X												-	-	A	

ENTER DESCRIPTION
EEC NO: UAU2010-1801 2010/06/01
DRWN:DGRIFFITHS 07-09-02
CHKD:DGRIFFITHS 2010/06/04
APPR: VKOSHY
DESCRIPTION
BU1
REV

QUALITY SYMBOLS
=0
=0
=0

GENERAL TOLERANCES (UNLESS SPECIFIED)

	mm	INCH
4 PLACES	± ---	± ---
3 PLACES	± ---	± ---
2 PLACES	± 0.10	± ---
1 PLACE	± 0.3	± ---
ANGULAR ± 3 °		

DRAFT WHERE APPLICABLE MUST REMAIN WITHIN DIMENSIONS

DIMENSION STYLE: MM ONLY
SCALE: 2:1
DESIGN UNITS: METRIC
THIRD ANGLE PROJECTION

		DATE
DRAWN BY	JWESLEY	06-16-02
CHECKED BY	DGRIFFITHS	07-09-02
APPROVED BY	VKOSHY	2010/04/06

MATERIAL NO.: SEE CHART

TITLE: 1.5MM/2.8MM HYBRID CONNECTOR, BLADE 2 ROW HOUSING, SEALED, 16 WAY

molex MOLEX INCORPORATED

DOCUMENT NO.: SD-33486-161

SHEET NO.: 3 OF 4

SIZE: E

THIS DRAWING CONTAINS INFORMATION THAT IS PROPRIETARY TO MOLEX INCORPORATED AND SHOULD NOT BE USED WITHOUT WRITTEN PERMISSION

ASSEMBLY PART NUMBER	COLOR	KEYING OPTION	DIMENSIONS IN DEGREES		CAVITY TYPE & STATUS (X = PLUGGED, SB = SHORTING BAR)													SHORTING BAR	SB QTY	CLIPSLOT TYPE	STATUS
			A	B	2	3	4	5	6	7	10	11	12	13	14	15					
33486-1902	BLACK	A	50	50			X										-	-	A		
33486-1903	BLACK	A	50	50	X				X	X			X	X	X	X	-	-	A		
33486-1904	BLACK	A	50	50			X							X		X	-	-	A		
33486-1905	BLACK	A	50	50	X		X							X		X	-	-	A		
33486-1906	BLACK	A	50	50				X								X	-	-	A		
33486-1907	YELLOW	A	50	50			X	X							X		-	-	A		
33486-1908	BLACK	A	50	50			X	X							X		-	-	A		
33486-1909	BLACK	A	50	50					X	X	X	X			X		-	-	A		
33486-1910	BLACK	A	50	50					X		X	X			X		-	-	A		
33486-1911	LT.GRAY	B	15	50				X	X	X	X	X	X	X	X	X	-	-	A		
33486-1912	BLACK	A	50	50	X		X					X		X	X		-	-	A		
33486-1913	BLACK	A	50	50			X					X		X	X		-	-	A		
33486-1914	BLACK	A	50	50	X		X					X		X	X	X	-	-	A		
33486-1915	BLACK	A	50	50			X					X		X	X	X	-	-	A		
33486-1916	BLACK	A	50	50			X							X			-	-	A		
33486-1917	BLACK	A	50	50	X	X	X	X					X	X		X	-	-	A		
33486-1918	BLACK	A	50	50	X	X	X						X	X		X	-	-	A		
33486-1919	BLACK	A	50	50	X	X			X	X				X		X	-	-	A		
33486-1920	BLACK	A	50	50	X	X	X							X		X	-	-	A		
33486-1921	BLACK	A	50	50	X	X	X	X		X	X	X		X	X	X	-	-	A		
33486-1922	BLACK	A	50	50	X			X		X					X		-	-	A		
33486-1923	BLACK	A	50	50	X	X	X	X		X	X	X	X	X	X	X	-	-	A		
33486-1924	BLACK	A	50	50		X	X		X		X	X	X	X		X	-	-	A		
33486-1925	BLACK	A	50	50					X	X				X	X	X	-	-	A		
33486-1926	BLACK	A	50	50		X	X	X	X	X	X	X	X	X	X	X	-	-	A		
33486-1927	BLACK	A	50	50	X								X	X	X	X	-	-	A		
33486-1928	LT.GRAY	B	15	50	X	X	X	X	X	X	X	X	X	X	X	X	-	-	A		
33486-1929	LT.GRAY	B	15	50					X	X							-	-	A		
33486-1930	BLACK	A	50	50	X			X	X		X	X	X	X		X	-	-	A		
33486-1931	BLACK	A	50	50	X		X	X			X		X	X			-	-	A		
33486-1932	BLACK	A	50	50	X		X						X	X			-	-	A		
33486-1933	BLACK	A	50	50	X				X				X	X	X	X	-	-	A		
33486-1934	BLACK	A	50	50				X	X	X	X	X	X	X	X	X	-	-	A		
33486-1935	BLACK	A	50	50		X	X		X		X	X	X	X	X	X	-	-	A		
33486-1936	BLACK	A	50	50	X			X				X		X		X	-	-	A		
33486-1937	BLACK	A	50	50	X			X			X	X		X		X	-	-	A		
33486-1938	BLACK	A	50	50	X				X		X	X	X	X	X	X	-	-	A		
33486-1939	BLACK	A	50	50			X	X					X			X	-	-	A		
33486-1940	BLACK	A	50	50		X	X			X	X	X	X		X	X	-	-	A		
33486-1941	BLACK	A	50	50												X	-	-	A		
33486-1942	BLACK	A	50	50	X	X		X		X	X	X	X	X	X	X	-	-	A		
33486-1943	BLACK	A	50	50					X	X		X		X			-	-	A		
33486-1944	LT.GRAY	B	15	50			X							X			-	-	A		
33486-1945	BLACK	A	50	50		X	X				X	X	X				-	-	A		
33486-1946	BLACK	A	50	50					X			X		X			-	-	A		
33486-1947	BLACK	A	50	50	X	X			X			X		X			-	-	A		
33486-1948	BLACK	A	50	50			X								X		-	-	A		
33486-1949	LT.GRAY	B	15	50			X										-	-	A		
33486-1950	BLACK	A	50	50						X	X			X	X	X	-	-	A		
33486-1951	BLACK	A	50	50						X				X	X	X	-	-	A		
33486-1952	BLACK	A	50	50							X			X	X		-	-	A		
33486-1953	BLACK	A	50	50						X	X			X		X	-	-	A		
33486-1954	YELLOW	H	50	32.5	X	X	SB	SB					SB	SB		X	YES	2	A	SALEABLE	
33486-1955	BLACK	A	50	50										X			-	-	A		
33486-1956	BLACK	A	50	50					X				X	X	X	X	-	-	A		
33486-1957	BLACK	A	50	50						X				X		X	-	-	A		
33486-1958	BLACK	A	50	50							X			X			-	-	A		

ENTER DESCRIPTION
ECC NO: UAU2010-1801
DRWN:DGRIFFITHS 2010/06/01
CHKD:DGRIFFITHS 07-09-02
APPR:VKOSHY 2010/06/04
DESCRIPTION
BU1
REV

QUALITY SYMBOLS
=0
=0
=0

GENERAL TOLERANCES (UNLESS SPECIFIED)

	mm	INCH
4 PLACES	±---	±---
3 PLACES	±---	±---
2 PLACES	±0.10	±---
1 PLACE	±0.3	±---
ANGULAR ± 3 °		

DRAFT WHERE APPLICABLE MUST REMAIN WITHIN DIMENSIONS

DIMENSION STYLE: MM ONLY
SCALE: 1:1
DESIGN UNITS: METRIC
THIRD ANGLE PROJECTION

DRAWN BY: JWESLEY DATE: 06-16-02
CHECKED BY: DGRIFFITHS DATE: 07-09-02
APPROVED BY: VKOSHY DATE: 2010/04/06
MATERIAL NO.: SEE CHART
SIZE: E

TITLE: 1.5MM/2.8MM HYBRID CONNECTOR, BLADE 2 ROW HOUSING, SEALED, 16 WAY

molex MOLEX INCORPORATED

DOCUMENT NO.: SD-33486-161
SHEET NO.: 4 OF 4

THIS DRAWING CONTAINS INFORMATION THAT IS PROPRIETARY TO MOLEX INCORPORATED AND SHOULD NOT BE USED WITHOUT WRITTEN PERMISSION