Bothhand USA. **e-mail: sales@bothhandusa.com http://www.bothhandusa.com**

10/100BASE-TX VOICE OVER IP MAGNETICS MODULES

P/N: 24ST006 DATA SHEET

Feature

- Designed to meet the requirements of IEEE802.3af with 350mA current capability.
- Standard devices are available for most leading silicon vendors' Phy's.
- Operating temperature range: 0°C to +70°C.
- Storage temperature range: -25°C to +125°C.

Electrical Specifications @ 25°C

Part Number	Turns Ratio (±5%)	OCL (uH Min) @ 100KHz/0.1Vrms with 8mA/DC Bias	$C_{W/W}$(pF Max)	DCR(Ω Max)	HI-POT (Vrms)
24ST006	1CT:1CT	350	28	0.9	1500

Continue

Part Number	Insertion Loss (dB Max)	Return Loss (dB Min)				Cross talk (dB Min)		CMR (dB Min)	
	0.3–100MHz	0.3-30MHz	40MHz	50MHz	60-80MHz	0.3-60MHz	60-80MHz	1-30MHz	30-60MHz
24ST006	-1.1	-18	-15.5	-13.6	-12	-40	-30	-40	-30

Schematic

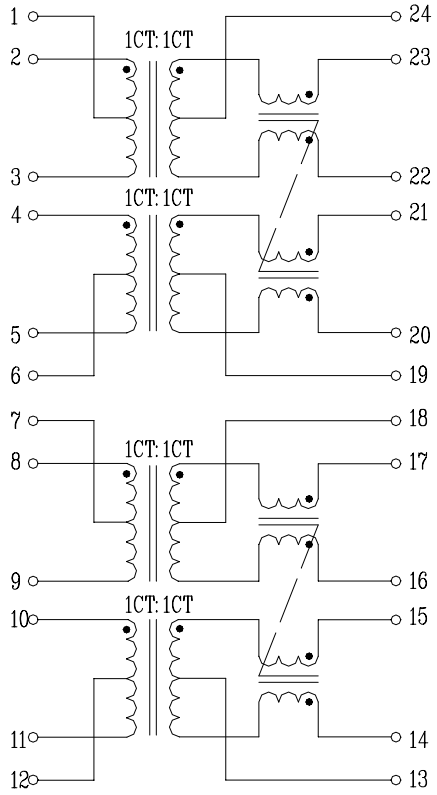

Mechanical

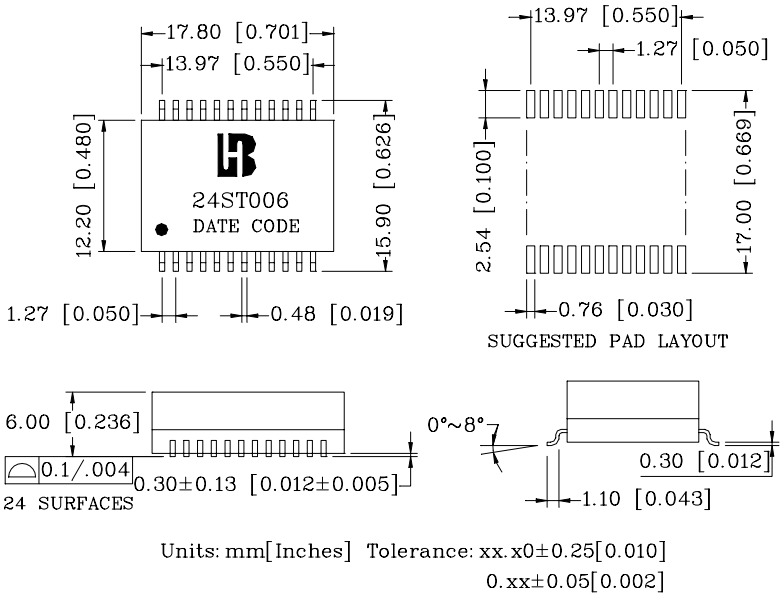

462 Boston St - Topsfield, MA 01983 - Phone: 978-887-8050 - Fax: 978-887-5434