Order this document by MRFIC1504/D

MOTOROLA

MRFIC1504

Integrated GPS Downconverter

This integrated circuit is intended for GPS receiver applications. The dual conversion design is implemented in Motorola's low–cost, high–performance MOSAIC 5™ silicon bipolar process and is packaged in a low–cost surface mount LQFP–48 package. In addition to the mixers, a VCO, PLL, Crystal Oscillator, A/D converter and a loop filter are integrated on–chip. Output IF is nominally 4.1 MHz.

- 105 dB Typical Conversion Gain
- 2.7 V Operation
- 28 mA Typical Current Consumption
- Low–Cost, Low–Profile Plastic LQFP Package

MOSAIC 5 is a trademark of Motorola, Inc.

1.575 GHz GPS DOWNCONVERTER

SEMICONDUCTOR TECHNICAL DATA

PLASTIC PACKAGE
CASE 932
(LQFP–48)

ORDERING INFORMATION

Device	Operating Temperature Range	Package
MRFIC1504R2	T_A = –40 to 85°C	LQFP–48

Pin Connections and Functional Block Diagram

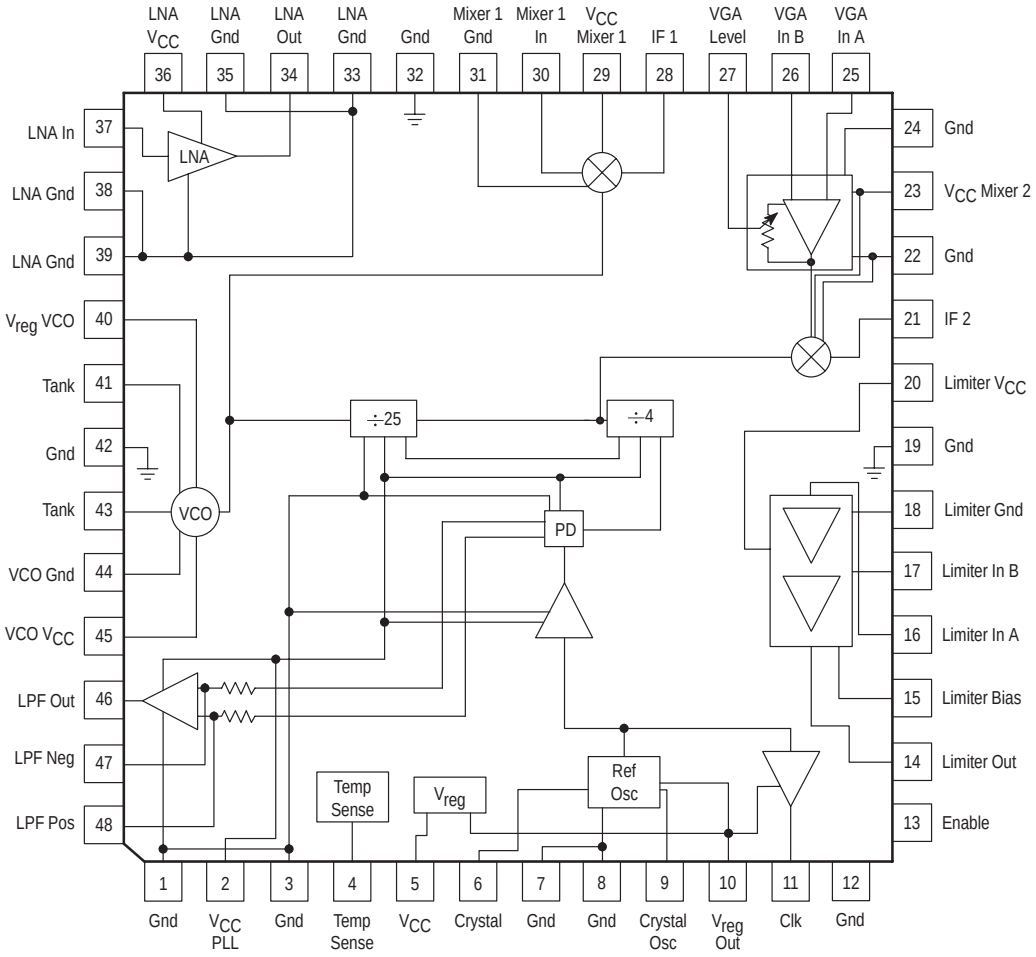

Rev 1

MAXIMUM RATINGS

Rating	Symbol	Value	Unit
DC Supply Voltage	V_{DD}	5.0	Vdc
DC Supply Current	I_{DD}	60	mA
Operating Ambient Temperature	T_A	–40 to 85	°C
Storage Temperature Range	T_{stg}	–65 to 150	°C
Lead Soldering Temperature Range (10 seconds)	–	260	°C

NOTE: Maximum Ratings are those values beyond which damage to the device may occur. Functional operation should be restricted to the limits in the Electrical Characteristics tables.

ELECTRICAL CHARACTERISTICS (V_{CC} = 2.7 to 3.3 V; T_A = –40 to 85°C; Enable = 2.7 V unless otherwise noted)

Characteristic	Symbol	Min	Typ	Max	Unit
TOTAL DEVICE					
Supply Voltage	V_{CC}	2.7	3.0	3.3	V
Supply Current (T_A = 25°C, V_{CC} = 2.7 V, Enable = 2.7 V)	I_{CC}	–	28	36	mA
Supply Current (T_A = 25°C, V_{CC} = 2.7 V, Enable = 0 V)	I_{CC}	–	2.0	4.0	mA
RF AMPLIFIER					
RF Input Frequency	f_{in}	–	1575.42	–	MHz
Input Impedance	Z_{in}	–	50	–	Ω
Input VSWR	$VSWR_{in}$	–	2.0	–	–
Gain	G	13	15	–	dB
Noise Figure	NF	–	2.0	–	dB
1.0 dB Compression (Measured at Output)	P_{1dB}	–	1.0	–	dBm
FIRST MIXER					
Input Frequency	f_{in}	–	1575.42	–	MHz
Gain	G	10	14	–	dB
Noise Figure	NF	–	13	–	dB
1.0 dB Compression (Measured at Output)	P_{1dB}	–	–13	–	dBm
First Local Oscillator Frequency	f_{LO1}	–	1636.8	–	MHz
First Intermediate Frequency	f_{IF1}	–	61.38	–	MHz
LO Leakage at IF Port	–	–	–40	–	dBm
LO Leakage at RF Port	–	–	–50	–	dBm
Output Impedance	Z_{out}	–	50	–	Ω
FIRST IF AMPLIFIER and SECOND MIXER					
Input Frequency	f_{in}	–	61.38	–	MHz
Imput Impedance	Z_{in}	–	230	–	Ω
Output Impedance	Z_{out}	–	50	–	Ω
Second Local Oscillator Frequency	f_{LO2}	–	65.47	–	MHz
Second Intermediate Frequency	f_{IF2}	–	4.092	–	MHz
LO Leakage at IF Port	–	–	–40	–	dBm
Gain	G	40	43	–	dB
Cascaded Noise Figure	NF	–	9.3	–	dB
1.0 dB Compression Point (Measured at Output)	P_{1dB}	–	–13	–	dBm

ELECTRICAL CHARACTERISTICS — continued (V_{CC} = 2.7 to 3.3 V; T_A = –40 to 85°C; Enable = 2.7 V unless otherwise noted)

Characteristic	Symbol	Min	Typ	Max	Unit
LIMITING AMPLIFIER					
Second Intermediate Frequency	f_{IF2}	–	4.092	–	MHz
Input Signal Level	–	4.0	11	31	mV
Output Voltage Swing (Into 10 pf ‖ 100 kΩ)	V_{out}	800	–	–	mVpp
DC Output Level	–	–	1.4	–	V
Gain	G	–	50	–	dB
REFERENCE OSCILLATOR					
Reference Frequency	f_r	–	16.368	–	MHz
Reference Frequency Input Level (Crystal Output Pin)	–	–	500	–	mVpp
Reference Oscillator Output Voltage Level (Into 15 pF ‖ 10 kΩ)	–	750	–	–	mVpp
Reference Clock Input Drive Level	–	400	800	1500	mVpp
PLL					
First Local Oscillator Frequency	f_{LO1}	–	1636.8	–	MHz
Second Local Oscillator Frequency	f_{LO2}	–	65.47	–	MHz
VCO C/N (at 10 kHz Offset)	–	–	–80	–	dBc/Hz
VCO Gain (TBD Varactor)	–	–	20	–	MHz/V
ENABLE					
Enable Active Level	–	0.8 × V_{CC}	V_{CC}	–	V
Disable Active Level	–	–	0	0.2 × V_{CC}	V
VOLTAGE REGULATOR					
Regulator Output Voltage (V_{CC} = 2.7 to 3.3 V, I_{out} = 3.0 mA)	V_o	2.1	2.3	2.5	V
TEMPERATURE SENSE SPECS					
Temperature Sensor Output Voltage @ 25°C	–	1.2	1.28	1.375	V
Temperature Sensor Slope over Temperature	–	–	5.0	–	mV/°C

Figure 1. Applications Schematic (1636.8 MHz LO)

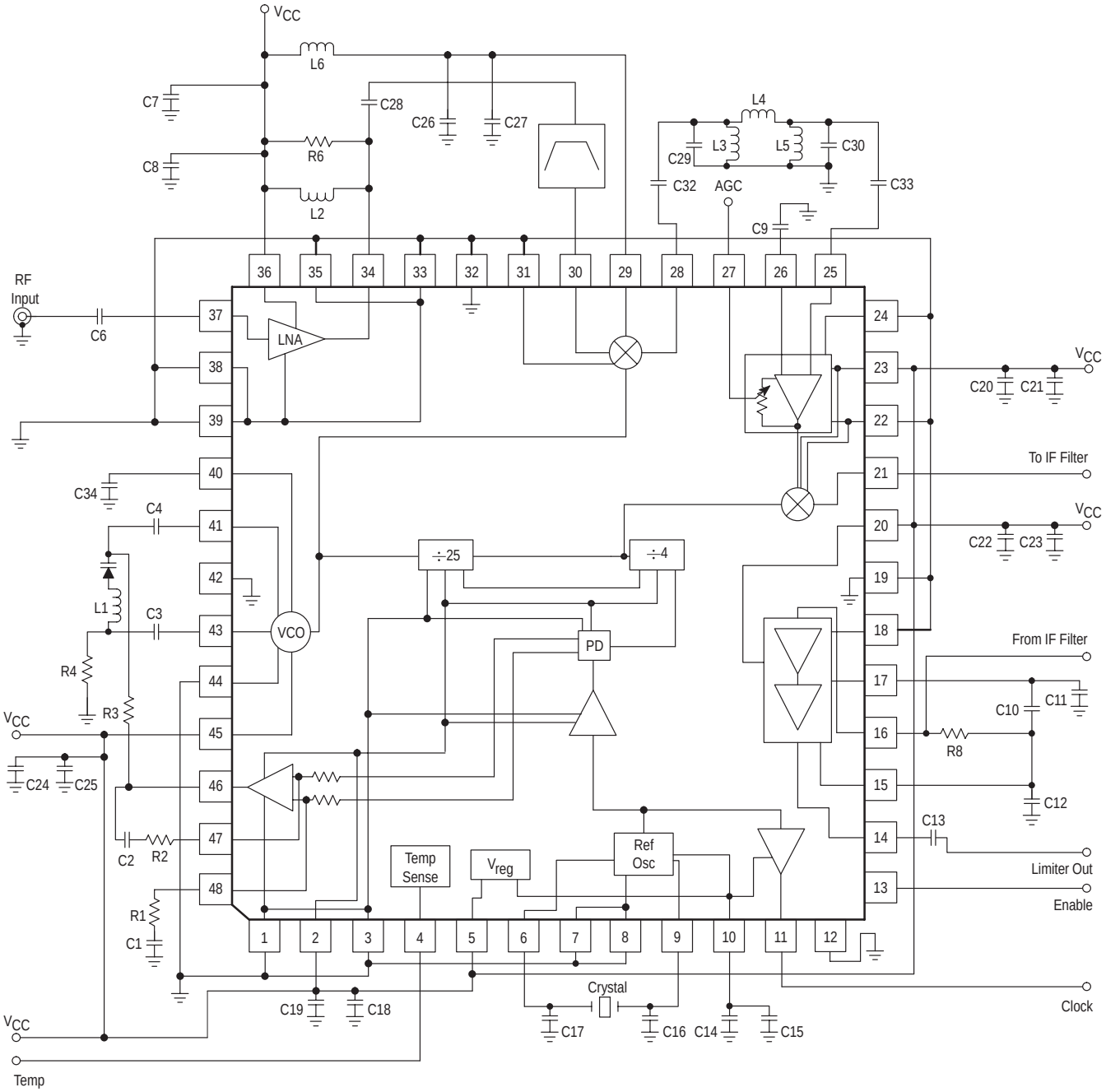

C1, C2	220 pF	C29, C30	91 pF
C3, C4	1.7 pF	C32, C33	1.0 nF
C6	10 pF	L1	10 nH
C7, C14, C18, C20, C22, C24, C34	0.01 µF	L2	3.9 nH
C8, C15, C19, C21, C23, C25, C27	1000 pF	L3, L5	82 nH
C9	1.0 µF	L4	0.62 µH
C10, C11, C12	1.0 npF	L6	TBD
C13	2.7 nF	R1, R2, R4	10 k
C16, C17	27 pF	R3	2 k
C26	470 pF	R6	1.2 k
C28	0.6 pF	R8	5.0 k

NOTES: 1. R8 must be set to match your 2nd IF filter impedance.
2. Layout of capacitors C10, C11, C12 is critical for stability of Limiter.

OUTLINE DIMENSIONS

PLASTIC PACKAGE
CASE 932–03
(LQFP–48)
ISSUE F

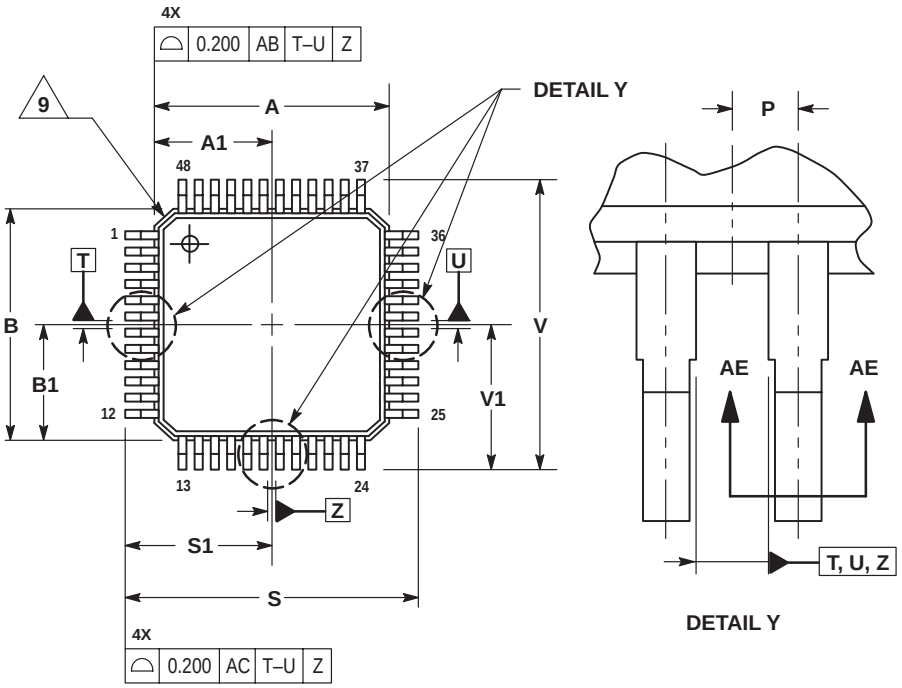

NOTES:
1. DIMENSIONING AND TOLERANCING PER ASME Y14.5M, 1994.
2. CONTROLLING DIMENSION: MILLIMETER.
3. DATUM PLANE AB IS LOCATED AT BOTTOM OF LEAD AND IS COINCIDENT WITH THE LEAD WHERE THE LEAD EXITS THE PLASTIC BODY AT THE BOTTOM OF THE PARTING LINE.
4. DATUMS T, U, AND Z TO BE DETERMINED AT DATUM PLANE AB.
5. DIMENSIONS S AND V TO BE DETERMINED AT SEATING PLANE AC.
6. DIMENSIONS A AND B DO NOT INCLUDE MOLD PROTRUSION. ALLOWABLE PROTRUSION IS 0.250 PER SIDE. DIMENSIONS A AND B DO INCLUDE MOLD MISMATCH AND ARE DETERMINED AT DATUM PLANE AB.
7. DIMENSION D DOES NOT INCLUDE DAMBAR PROTRUSION. DAMBAR PROTRUSION SHALL NOT CAUSE THE D DIMENSION TO EXCEED 0.350.
8. MINIMUM SOLDER PLATE THICKNESS SHALL BE 0.0076.
9. EXACT SHAPE OF EACH CORNER IS OPTIONAL.

	MILLIMETERS	
DIM	MIN	MAX
A	7.000 BSC	
A1	3.500 BSC	
B	7.000 BSC	
B1	3.500 BSC	
C	1.400	1.600
D	0.170	0.270
E	1.350	1.450
F	0.170	0.230
G	0.500 BSC	
H	0.050	0.150
J	0.090	0.200
K	0.500	0.700
L	0 °	7 °
M	12 °REF	
N	0.090	0.160
P	0.250 BSC	
R	0.150	0.250
S	9.000 BSC	
S1	4.500 BSC	
V	9.000 BSC	
V1	4.500 BSC	
W	0.200 REF	
AA	1.000 REF	

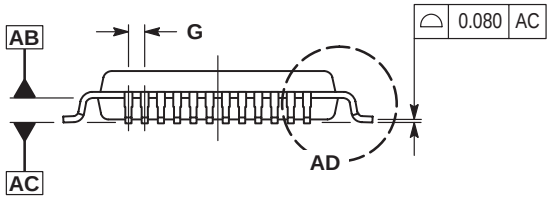

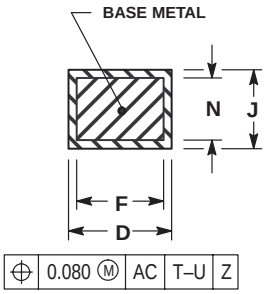

SECTION AE–AE

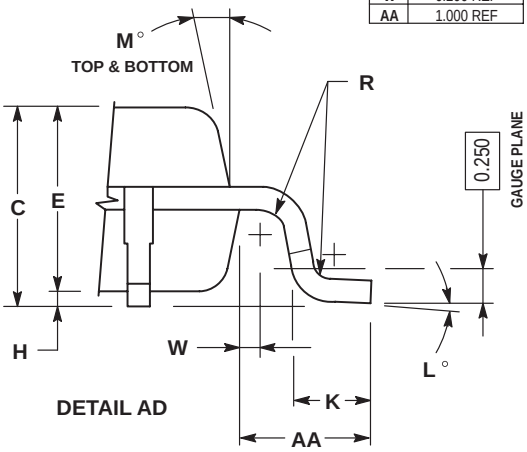

DETAIL AD

NOTES

NOTES

How to reach us:
USA / EUROPE / Locations Not Listed: Motorola Literature Distribution;
P.O. Box 5405, Denver, Colorado 80217. 1–303–675–2140 or 1–800–441–2447

Technical Information Center: 1–800–521–6274

JAPAN: Motorola Japan Ltd.; SPS, Technical Information Center, 3–20–1, Minami–Azabu. Minato–ku, Tokyo 106–8573 Japan. 81–3–3440–3569

ASIA / PACIFIC: Motorola Semiconductors H.K. Ltd.; Silicon Harbour Centre, 2, Dai King Street, Tai Po Industrial Estate, Tai Po, N.T., Hong Kong. 852–26668334

HOME PAGE: http://www.motorola.com/semiconductors/