THIS DRAWING IS UNPUBLISHED. RELEASED FOR PUBLICATION -.- .
© COPYRIGHT - BY TYCO ELECTRONICS CORPORATION. ALL RIGHTS RESERVED.

LOC	DIST
GP	00

REVISIONS

P	LTR	DESCRIPTION	DATE	DWN	APVD
	C	REVISED PER ECO-08-007327	09APR08	BM	WM
	C1	REVISED PER ECO-10-000444	19JAN10	KK	HMR

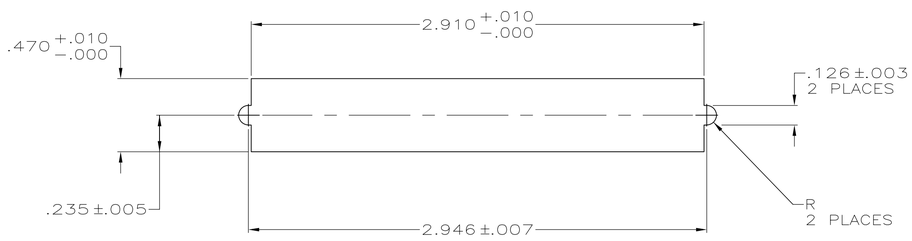

SUGGESTED BRACKET CUTOUT
MOUNTING DIMENSIONS
SCALE 2:1

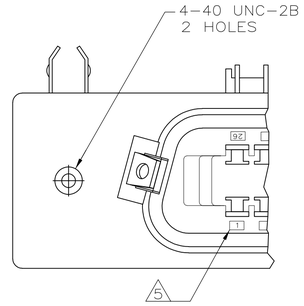

VIEW A–A

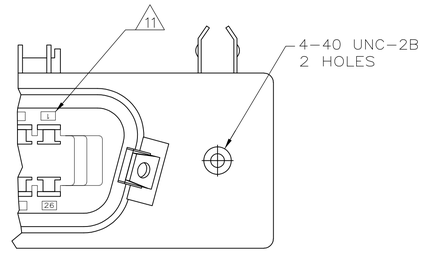

VIEW C–C

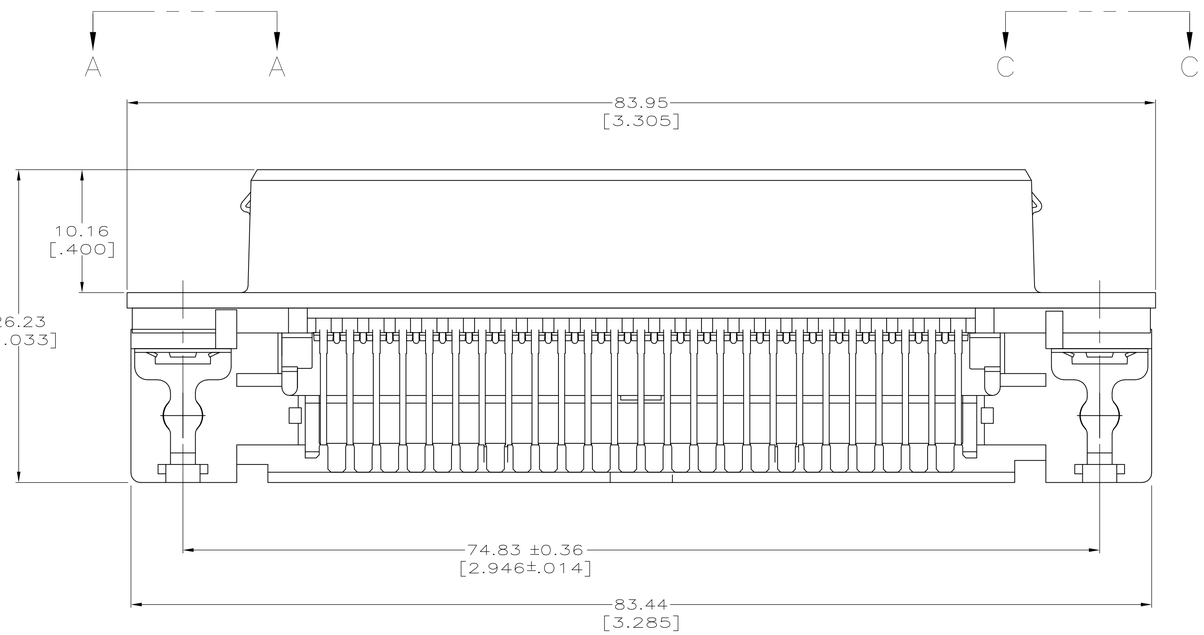

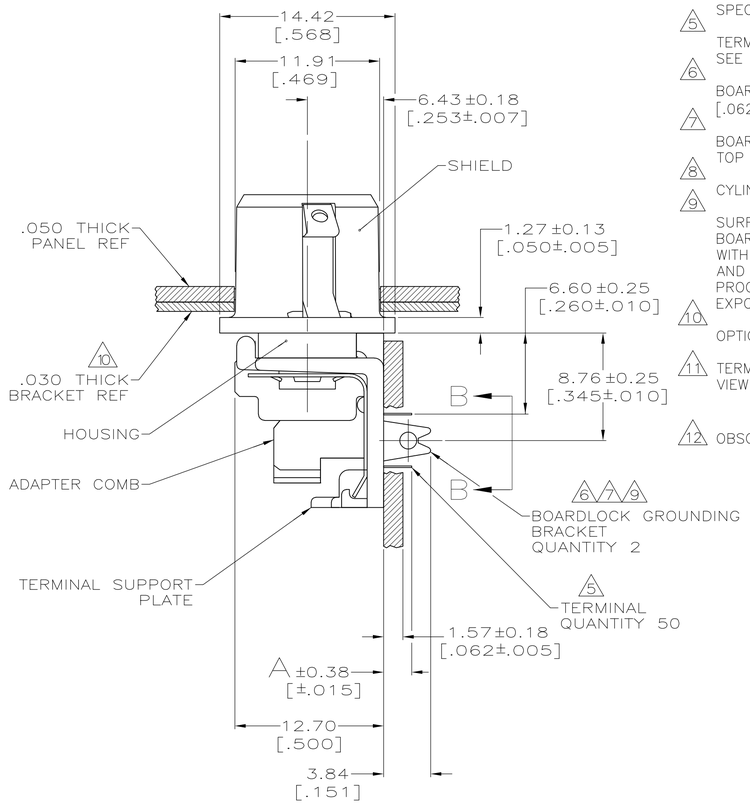

1. MATERIAL:
HOUSING, ADAPTER COMB & SUPPORT PLATE – POLYESTER, BLACK.
TERMINALS – HIGH STRENGTH COPPER ALLOY PLATED WITH EITHER 0.76μm [.000030] MIN GOLD PLATE OR GOLD FLASH OVER PALLADIUM NICKEL PLATE, 0.76μm [.000030] MIN TOTAL ON MATING SURFACE. 3.05μm [.000120] MIN TIN PLATE ON TAILS. ALL OVER 1.27μm [.000050] MIN NICKEL UNDERPLATE OVER ENTIRE TERMINAL.
SHIELD – BRIGHT NICKEL OVER COPPER PLATED ZINC.
BOARDLOCK GROUND BRACKET – TIN PLATED CARBON STEEL.

2. THE CONTACT SURFACES OF THE TERMINALS ARE COATED WITH LUBRICANT.

3. CENTER–TO–CENTER SPACING OF TERMINALS IS 2.16 [.085] NOMINAL.

4. ALL DIMENSIONS SHOWN ARE MAXIMUM UNLESS OTHERWISE SPECIFIED.

5. TERMINAL 1 LOCATED IN THIS ROW FOR STANDARD ORIENTATION, SEE VIEW A–A.

6. BOARDLOCK GROUNDING BRACKET RETAINS CONNECTOR IN 1.58 [.062] THICK PC BOARD WITHOUT ADDITIONAL HARDWARE.

7. BOARDLOCK GROUNDING BRACKET LOCATES CONNECTOR FLUSH WITH TOP OF PC BOARD AND SPRING LOCKS BENEATH.

8. CYLINDRICAL SHAPE OFFERS 180° OF SOLDERING SURFACE.

9. SURFACE AREA OF BOARDLOCK GROUNDING BRACKET BELOW PC BOARD SHALL PASS SOLDERABILITY REQUIREMENTS IN ACCORDANCE WITH AMP SPEC 109–11–2. DISCOLORATION, SCRATCHES, SPOTS AND OTHER COSMETIC DEFICIENCIES TYPICAL OF BARREL PLATING PROCESSES ARE ACCEPTABLE PROVIDING PARTS PASS 24 HOUR EXPOSURE AT 95% RH AT 40°C WITHOUT EVIDENCE OF CORROSION.

10. OPTIONAL BRACKET SUPPLIED BY CUSTOMER.

11. TERMINAL 1 LOCATED IN THIS ROW FOR REVERSE ORIENTATION, SEE VIEW C–C.

12. OBSOLETE PARTS: OBSOLETE CIS STREAMLINING PER D.RENAUD/D.SINISI

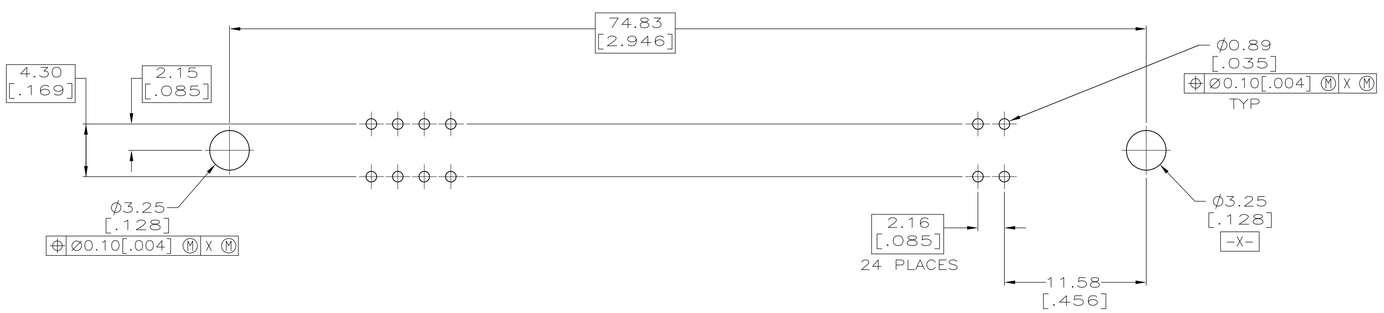

SUGGESTED PRINTED CIRCUIT BOARD
MOUNTING DIMENSIONS

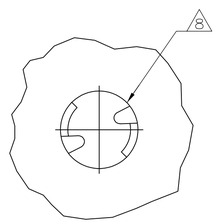

VIEW B–B
SCALE 8:1

	DIM "A"	LATCH END	ORIENTATION	PART NUMBER
	3.175 [.125]	NONE	5 STANDARD,VIEW A–A	1–6339447–0
	3.175 [.125]	1–26	11 REVERSE,VIEW C–C	6339447–9
12 OBSOLETE	2.29 [.090]	NONE	11 REVERSE,VIEW C–C	~~6339447–8~~
	2.29 [.090]	NONE	5 STANDARD,VIEW A–A	6339447–7
12 OBSOLETE	2.29 [.090]	25–50	11 REVERSE,VIEW C–C	~~6339447–6~~
	2.29 [.090]	25–50	5 STANDARD,VIEW A–A	~~6339447–5~~
	2.29 [.090]	1–26/25–50	11 REVERSE,VIEW C–C	~~6339447–4~~
	2.29 [.090]	1–26/25–50	5 STANDARD,VIEW A–A	~~6339447–3~~
	2.29 [.090]	1–26	11 REVERSE,VIEW C–C	6339447–2
	2.29 [.090]	1–26	5 STANDARD,VIEW A–A	6339447–1

THIS DRAWING IS A CONTROLLED DOCUMENT.

DIMENSIONS: mm [INCHES]

TOLERANCES UNLESS OTHERWISE SPECIFIED:
0 PLC ± –
1 PLC ± –
2 PLC ± –
3 PLC ± –
4 PLC ± –
ANGLES ± –

MATERIAL 1
FINISH 1

DWN D.L. DRUMMOND 11APR01
CHK W. MILLHIMES 01SEP05
APVD W. MILLHIMES 01SEP05
PRODUCT SPEC —
APPLICATION SPEC —
WEIGHT —

Tyco Electronics
Tyco Electronics Corporation
Harrisburg, PA 17105–3608

NAME
RECEPTACLE ASSEMBLY,LOW PROFILE, SHIELDED,RIGHT ANGLE,50 POSITION, BOARD LOCK,INTEGRAL LOCKING LATCH,CHAMP

SIZE	CAGE CODE	DRAWING NO	RESTRICTED TO
A1	00779	C–6339447	—

CUSTOMER DRAWING | SCALE 4:1 | SHEET 1 OF 1 | REV C1