TELEVISION/VIDEO DEVICES

SEMICONDUCTORS

(a) I.F./R.F. amplifiers and oscillators

NPN PNP TYPE			Maximum Ratings				Electrical Characteristics at $T_J = 25°C$							
Case: SOT-25 P_D = 250 mW @ Ta=25°C	Case: To.92 P_D=200 mW @ Ta=25°C	Case: To.106 P_D = 150 mW @ Ta=25°C	V_{CBO} V	V_{CEO} V	V_{EBO} V	I_C mA	h_{FE} min-max	@ V_{CE}/I_C V/mA	G_{PE} @ f dB	MHz	f_T MHz	C_{re} pF	N_F @ f dB	MHz
BF 194A	194A	EBF 194A	30	20	5	30	200-500	10/1	-	-	350	0.95	1.0	1
BF 194B	194B	EBF 194B	30	20	5	30	100-220	10/1	-	-	260	0.95	1.2	1
BF 195C	194C	EBF 195C	30	20	5	30	70-110	10/1	-	-	200	0.95	3.5	1
BF 195D	195D	EBF 195D	30	20	5	30	30-75	10/1	-	-	200	0.95	3.5	1

NPN PNP TYPE		Maximum Ratings					Electrical Characteristics at $T_J = 25°C$							
Case: TO-72	Case: TO-92	P_D Ta=25°C W	V_{CBO} V	V_{CEO} V	V_{EBO} V	I_C mA	h_{FE} min/max	@ V_{CE}/I_C V/mA	G_{PE} dB	@ f MHz	f_T MHz	C_{re} pF	N_F dB	@ MHz
BF 167	167	0.15	40	30	4	25	25/-	10/4	42	35	350	0.15	3	35
BF 173	173	0.275	40	30	4	25	35/-	10/7	42	35	550	0.23	-	-
BF 180	180	0.15	30	20	3	20	13/-	10/2*	12	900	675	0.28	2.5	200
BF 181	181	0.15	30	20	3	20	13/-	10/2*	11	900	600	0.28	6.8	900
BF 182	182	0.15	25	20	3	15	10/-	10/2*	11	900	650	0.33	3.3	200
BF 200	200	0.15	30	20	3	20	15/-	10/3*	30	30	650	0.28	2	100
BF 200 B	-	0.15	30	20	3	20	50/-	10/3*	30	30	650typ	0.28	2	100
BF 362	-	0.12	30	20	3	20	15/-	10/3*	30	30	800typ	0.28	2	800
BF 363	-	0.12	30	20	3	20	15/-	10/3*	30	30	600-800	0.28	2	800

*V_{CB}/I_E

TYPE NPN	PD@ Ta=25°C W	I_{CBO} V	V_{CEO} V	V_{EBO} V	I_C mA	h_{FE} min/max	@ V_{CE}/I_C V/mA	f_T min GHz	I_{CBO} nA	Cob pF	NF dB (at 200 MHz)	Case
BFY 90	0.2	30	15	2.5	25	25/150	1/2	1.4 typ	10	0.6	2.5	TO-72
BFW 92	0.19	25	15	2.5	25	20/150	1/2	1.6 typ	50	0.6	4.0	TO-72
BFW 30	0.25	20	10	2.5	50	-/25	5/25	1.6 typ	50	0.8	5.0	TO-72
BFR 90	0.18	20	15	2.0	30	50/-	10/14	5.0 typ	50	0.4*	2.4	TO-72/TO-92

*TO-50

TYPE NPN PNP	Maximum Ratings					Electrical Characteristics at $T_J = 25°C$					
	P_D @ Ta=25°C	V_{CBO} V	V_{CEO} V	V_{EBO} V	I_C mA	h_{FE} min/max	@ V_{CE}/I_C V/mA	f_T min MHz	I_{CBO} µA	Cob pF	Case
2N917	0.2	30	15	3	50	20/200	1/3	500	0.001	1.7	TO-72
2N918	0.2	30	15	3	50	20/-	1/3	600	0.01	1.7	TO-72
2N3553	7*	65	40	4	1000	10/-	5/250	350	1000	10	TO-39
2N3866	5*	55	30	3.5	400	10/200	5/50	500	—	3	TO-39
2N4080	0.3	20	15	3	50	20/-	1/3	1000	0.01	1.7	TO-72

† I_{CEO} * P_D @ T_C = 25°C

(b) V.H.F./U.H.F. TV tuning devices

TYPE NPN	PD @ Ta=25°C (mW)	V_{CBO} V	V_{CEO} V	V_{EBO} V	I_C mA	I_B	hFE	V_{CE}/I_C V/mA	f_T (typ/max) MHz	I_{CBO} nA (max)	I_{EBO} nA	V_{CE} (sat) V	I_C/I_B mA	Case
2 SC1393	250	30	30	4.0	20	-	40-240	10/2	400/700	100	-	-	-	TO-92 TO-72
2 SC1394	250	30	30	4.0	20	-	40-240	10/2	400/700	100	-	0.7	10/1	TO-92 TO-72
2 SC1395	250	30	15	4.0	20	-	40-240	10/2	600/1100	100	100	0.5	@ 10/1	TO-92 TO-72
2 SC1674	250	30	20	4.0	20	-	40-240	6/1	-/500	-	-	-	-	TO-92 TO-72
2 SC1730	250	30	15	5.0	50	-	40-240	10/5	800/1100 typ	100	-	0.5	@ 10/1	TO-92

CASE OUTLINES

SEMICONDUCTORS

DO-7

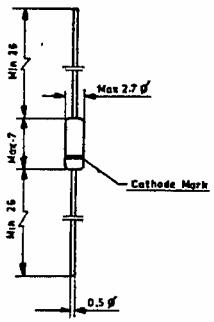

DO-35

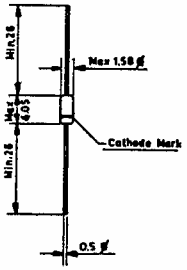

SOT-25

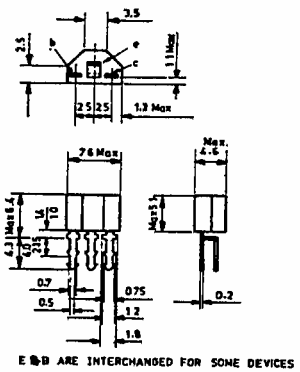

TO-3

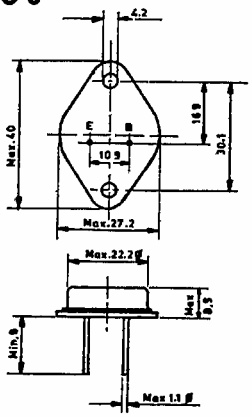

TO-5

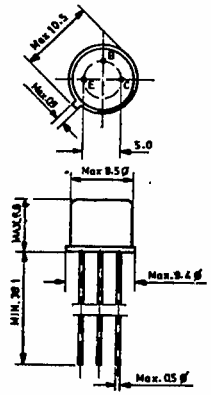

TO-18

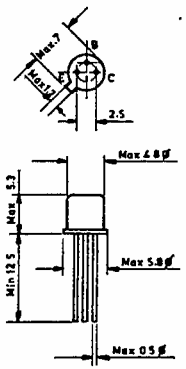

TO-39

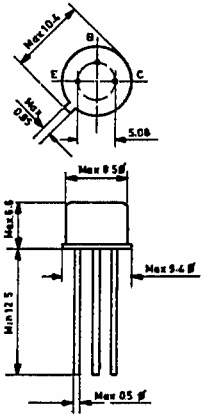

TO-66

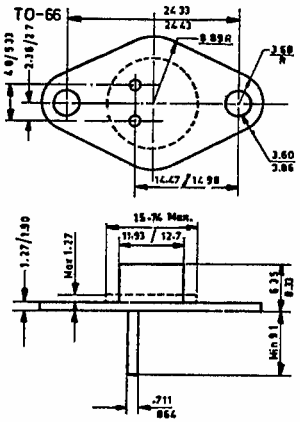

TO-72

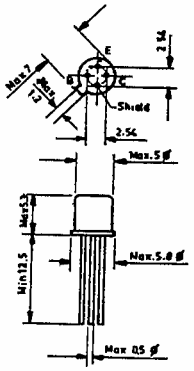

E & B ARE INTERCHANGED FOR SOME DEVICES

TO-92

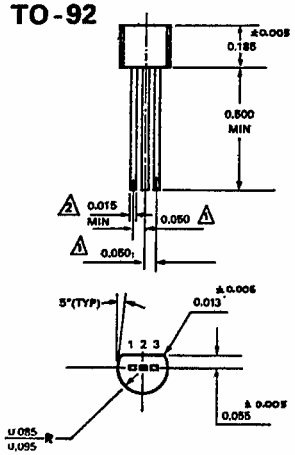

(Dimensions in inches)

Note : Dimensions in mm unless otherwise specified

TO-96

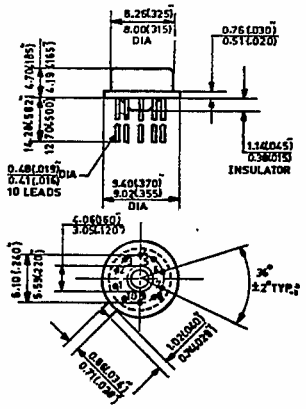

TO-99

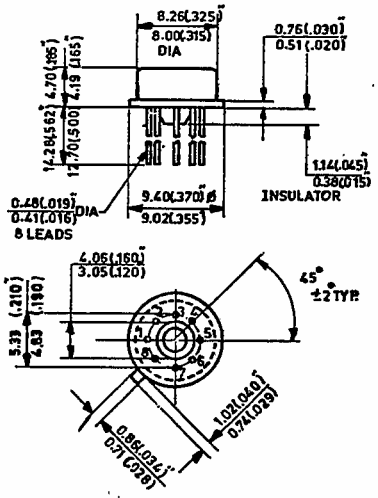

TO-105

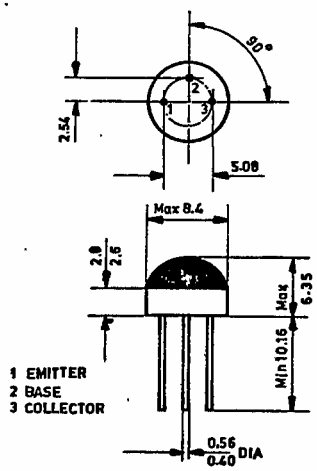

TO-106

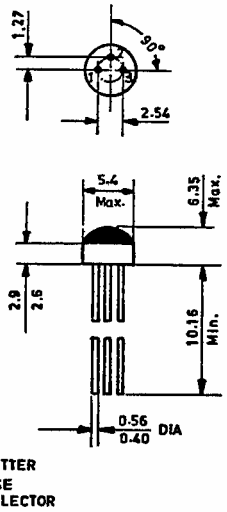

TO-220

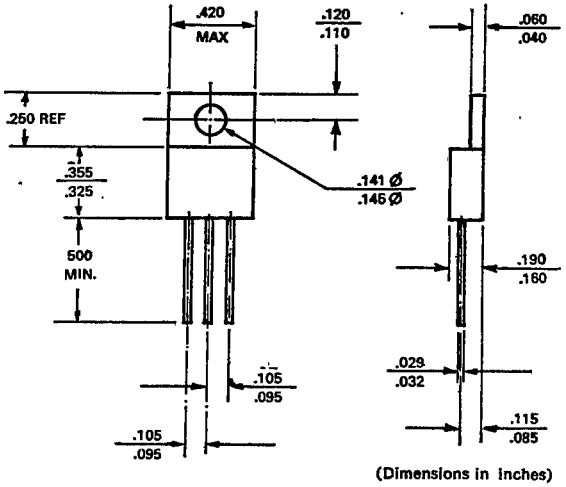

14 pin DIP

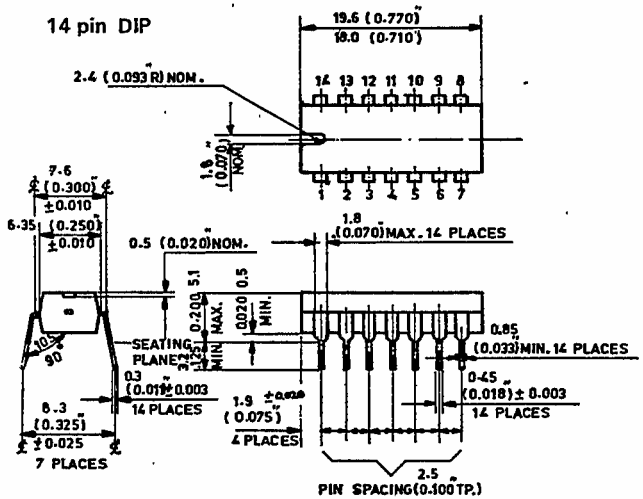

16 pin DIP

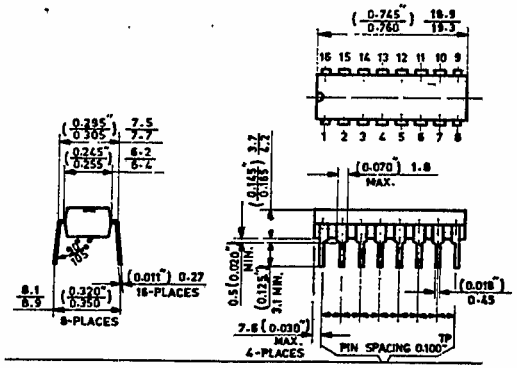

Note : Dimensions in mm unless otherwise specified