MICRO SWITCH
A DIVISION OF MINNEAPOLIS-HONEYWELL REGULATOR COMPANY
FREEPORT, ILLINOIS
FED. MFR. CODE 91929

SWITCH—ENCLOSED

CATALOG LISTING
5LS1-L

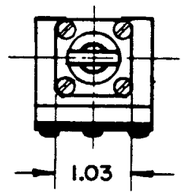

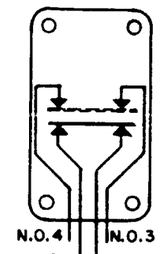

CIRCUIT DIAGRAM

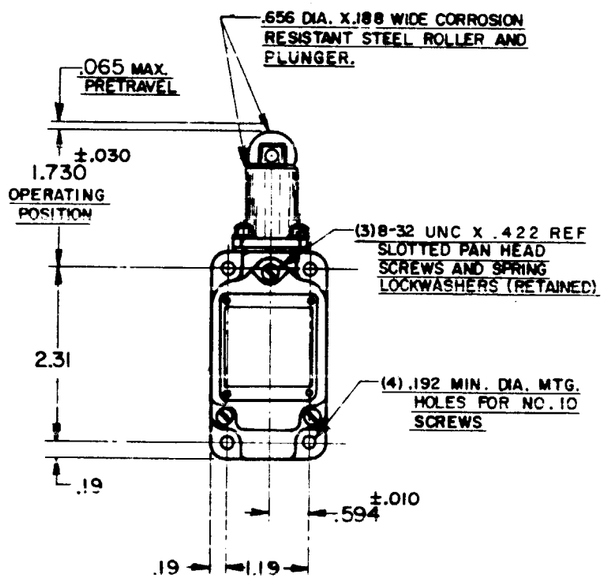

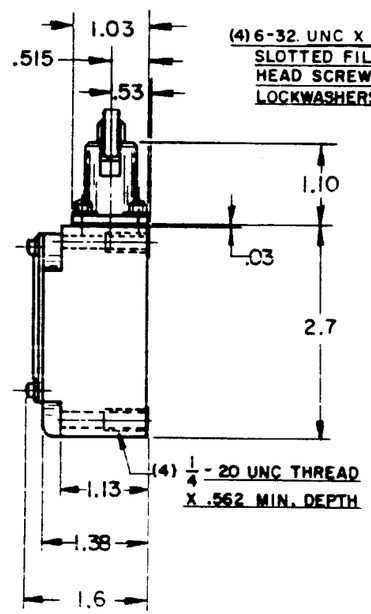

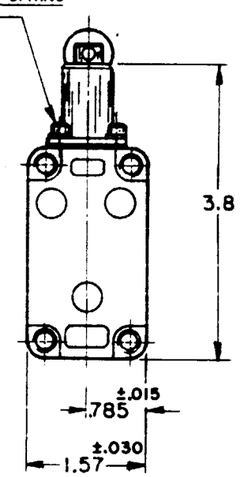

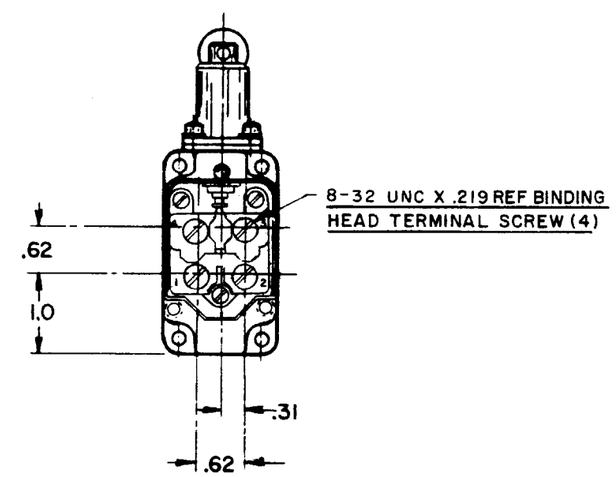

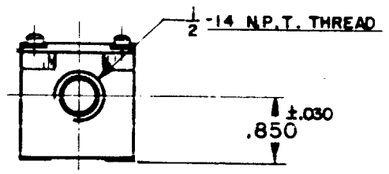

NOTE—

2- ROLLER ASSEMBLY MAY BE RE-ASSEMBLED 90° FROM POSITION SHOWN.
3- IT IS ESSENTIAL TO PREVENT ENTRANCE OF HARMFUL AGENTS THRU THE CONDUIT OPENING TO OBTAIN THE FULL BENEFIT OF THE SEALED CONSTRUCTION PROVIDED IN THIS UNIT.
4- SWITCH LISTED BY UNDERWRITERS LABORATORIES, INC. - FILE E12252, CODE L126

THIS DRAWING COVERS A PROPRIETARY ITEM AND IS THE PROPERTY OF MICRO SWITCH, A DIVISION OF HONEYWELL. THIS DRAWING IS NOT TO BE COPIED OR USED WITHOUT THE APPROVAL OF MICRO SWITCH

CHARACTERISTICS

OPERATING FORCE — — — — 7 LB. MAX. (D)
RELEASE FORCE — — — — — — 2 LB. MIN.
DIFFERENTIAL TRAVEL — — — — .020 MAX.
OVERTRAVEL — — — — — — — — .219 MIN.
RELEASE TRAVEL — — — — — — .015 MIN.
SWITCH-BASIC REPLACEMENT — — — 2 MNI-L

ELECTRICAL DATA

CONTACT ARRANGEMENT
SEE CIRCUIT DIAGRAM

UNDERWRITERS' LAB. INC. LISTED RATING
—L 126— 10A - 125, 250 OR 480 VAC
1/3 HP - 125 VAC; 3/4 HP - 250 VAC
0.8A - 125 VDC; 0.4A - 250 VDC

(B)

SCALE 1/2 TO 1
DO NOT SCALE PRINT

UNLESS OTHERWISE SPECIFIED
DIMENSIONS ARE IN INCHES
TOLERANCES ARE:

ONE PLACE	(.0)	±.030
TWO PLACE	(.00)	±.015
THREE PLACE	(.000)	±.005
ANGLES		±

WEIGHT

5LS1-L

M

DRAWING NUMBER

ISSUE

RELEASE NO. SR11246

REPLACES

REVISIONS				
A	SR 11246	L E B 10 SEPT 63	CO 20325	JUNE 63
B		O M W 5 OCT 65	CO 23403	
C		M B S 25 SEP 65	CO 24612	
D		R E R 5 OCT 68	CO 25347	
E		G F S 25 JAN 69	CO 25152	JUNE 63
F		D A W 9 APR 69	CO 50952	
G		KAG FEB 83	CO 53005-D	
H		CJH AUG 84	CO 65412-C	
J		SAV 6 JUL 90	CO 65614-E	
K		G R T 28 NOV 90		

DRAWN O M W 4 JUN 63 — CHECK K A H — CHECK — CHECK W A R — CHECK

74-863