molex
one company › a world of innovation

This document was generated on 05/26/2010

PLEASE CHECK WWW.MOLEX.COM FOR LATEST PART INFORMATION

Part Number: 0879148016

Status: Active

Overview: cgrid__sl_products

Description: 2.54mm (.100") Pitch C-Grid® Header, Through Hole, Dual Row, Vertical, 80 Circuits, 2.50µm (98.4µ") Tin (Sn) Overall Plating, Lead-free

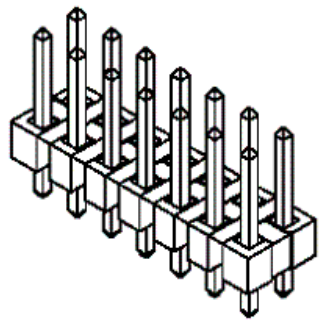

Series image - Reference only

Documents:

3D Model
Drawing (PDF)
Product Specification PS-87920-019 (PDF)
RoHS Certificate of Compliance (PDF)

General

Product Family	PCB Headers
Series	87914
Application	Board-to-Board, Wire-to-Board
Overview	cgrid__sl_products
Product Name	C-Grid®

Physical

Breakaway	Yes
Circuits (Loaded)	80
Circuits (maximum)	80
Color - Resin	Black
First Mate / Last Break	No
Glow-Wire Compliant	No
Guide to Mating Part	No
Keying to Mating Part	None
Lock to Mating Part	None
Mated Height (in)	0.230 In
Mated Height (mm)	5.84 mm
Material - Metal	Copper Alloy
Material - Plating Mating	Tin
Material - Plating Termination	Nickel
Material - Resin	High Temperature Thermoplastic
Number of Rows	2
Orientation	Vertical
PC Tail Length (in)	0.110 In
PC Tail Length (mm)	2.79 mm
PCB Locator	No
PCB Retention	None
PCB Thickness Recommended (in)	0.062 In
PCB Thickness Recommended (mm)	1.60 mm
Packaging Type	Bag
Pitch - Mating Interface (in)	0.100 In
Pitch - Mating Interface (mm)	2.54 mm
Pitch - Term. Interface (in)	0.100 In
Pitch - Term. Interface (mm)	2.54 mm
Plating min: Mating (µin)	98
Plating min: Mating (µm)	2.50
Plating min: Termination (µin)	49
Plating min: Termination (µm)	1.25
Polarized to Mating Part	No
Polarized to PCB	No
Shrouded	No
Stackable	No
Surface Mount Compatible (SMC)	Yes
Temperature Range - Operating	-55°C to +105°C

EU RoHS
ELV and RoHS Compliant
REACH SVHC
Not Reviewed
Halogen-Free Status
Not Reviewed

China RoHS

Need more information on product environmental compliance?

Email productcompliance@molex.com
For a multiple part number RoHS Certificate of Compliance, click here

Please visit the Contact Us section for any non-product compliance questions.

Search Parts in this Series
87914Series

Mates With
KK® PCB Receptacles like 4455. SL™ IDT Housings like 70430. KK® IDT Housings like 7720 and 70400a. C-Grid® PCB Receptacles like 90147 and 90148

Termination Interface: Style	Through Hole

Electrical

Current - Maximum per Contact	3A
Voltage - Maximum	250V

Solder Process Data

Duration at Max. Process Temperature (seconds)	12
Lead-free Process Capability	Wave Capable (TH only)
Max. Cycles at Max. Process Temperature	1
Process Temperature max. C	260

Material Info

Reference - Drawing Numbers

Packaging Specification	PK-89990-491
Product Specification	PS-87920-019
Sales Drawing	SD-87914-013

This document was generated on 05/26/2010

PLEASE CHECK WWW.MOLEX.COM FOR LATEST PART INFORMATION

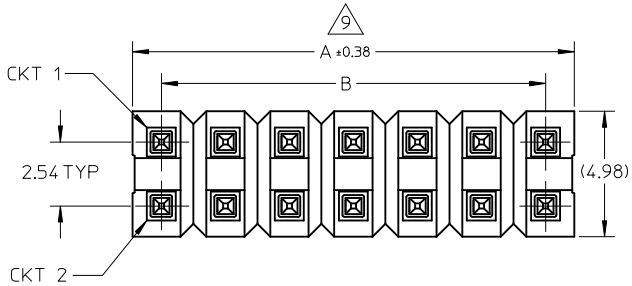

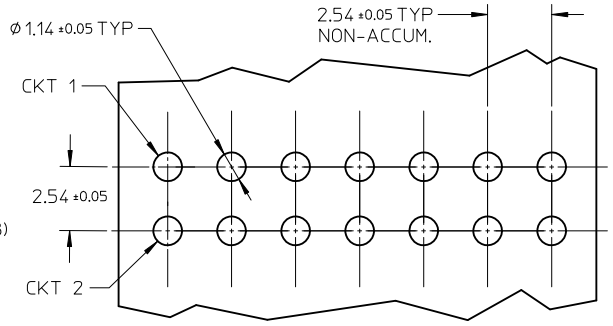

RECOMMENDED P.C.B HOLE LAYOUT

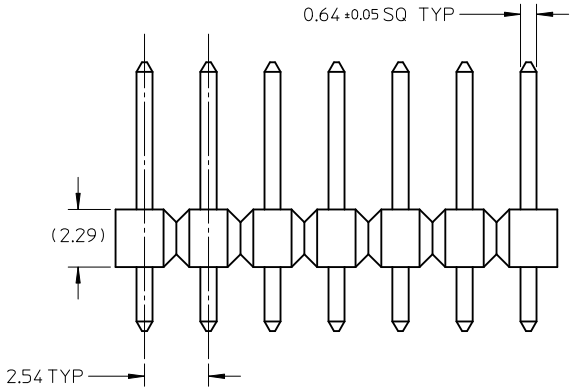

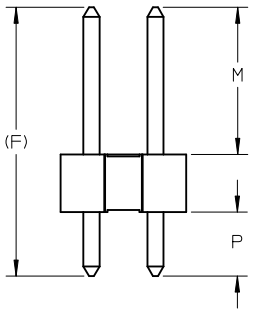

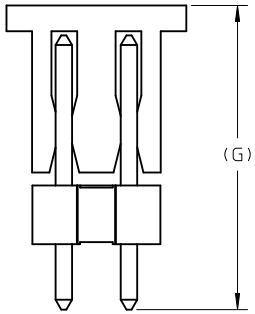

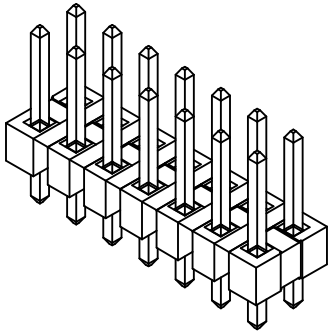

NOTES:

1. MATERIAL:
   HSG: LCP, GLASS-FILLED, UL94V-0,
   COLOR: BLACK
   PIN: 0.64MM SQ PIN, COPPER ALLOY
2. PLATING TYPE:
   (1) : GOLD FLASH OVER
   1.25 MICRO METER MIN. NICKEL OVERALL.
   (2) : 0.025 μm MIN. GOLD PLATE ON CONTACT AND
   1.88 μm MIN. TIN ON SOLDERTAIL OVER
   1.25 μm MIN. NICKEL OVERALL.
   (3) : 0.25 μm MIN. GOLD PLATE ON CONTACT AND
   1.88 μm MIN. TIN ON SOLDERTAIL OVER
   1.25 μm MIN. NICKEL OVERALL.
   (4) : 0.38 μm MIN. GOLD PLATE ON CONTACT AND
   1.88 μm MIN. TIN ON SOLDERTAIL OVER
   1.25 μm MIN. NICKEL OVERALL.
   (5) : 0.75 μm MIN. GOLD PLATE ON CONTACT AND
   1.88 μm MIN. TIN ON SOLDERTAIL OVER
   1.25 μm MIN. NICKEL OVERALL
   (6) : 2.50 μm MIN. TIN IN SELECTED AREA OVER
   1.25 μm MIN. NICKEL OVERALL.
   (7) : 0.38 μm MIN. GOLD PLATE ON CONTACT AND
   2.50 μm MIN. TIN ON SOLDERTAIL OVER
   1.25 μm MIN. NICKEL OVERALL.
   (8) : 0.38 μm MIN. GOLD PLATE ON CONTACT AND
   0.05 μm MIN. GOLD FLASH ON SOLDERTAIL OVER
   1.25 μm MIN. NICKEL OVERALL.
3. PIN PUSHOUT FORCE: 1KG MIN IN EITHER DIRECTION
4. THE ABOVE 14 CKT IS FOR ILLUSTRATION PURPOSE ONLY.
5. FOR PACKAGING OPTION PLEASE REFER TO THE TABLE.
6. RECOMMENDED PCB THICKNESS 1.60MM.
7. PRODUCT SPECIFICATION: PS-87920-019
8. WAFER TO BE FLAT WITHIN 0.003mm/mm
9. IRREGULAR CIRCUIT CUTOFF WITHIN BREAKAWAY SECTION IS PERMISSIBLE. CUTTING OR CHIPPING OF THE MAIN BODY IS NOT ACCEPTABLE.
10. PARTS ARE NOT STACKABLE ON 2.54 CENTER
11. CAP TO BE PLACED AS CENTRAL OF PART AS POSSIBLE WITH THE TOP SURFACE FLAT FOR PICK AND PLACE.
12. PACKAGING SPECIFICATION:
    TRAY: PK-89990-489
    BULK: PK-89990-491

PG8, +879140108	2010/02/11		
EC NO: S2010-0695	2004/12/08		
DRWN:ATSEE	2004/06/05		
CH'KD:PTLIM			
APPR:MLONG			
D7	DESCRIPTION	REV	

QUALITY SYMBOLS: F_A=0, F_C=0, F_P=0

GENERAL TOLERANCES (UNLESS SPECIFIED)

	mm	INCH
4 PLACES	± ---	± ---
3 PLACES	± ---	± ---
2 PLACES	± 0.20	± ---
1 PLACE	± ---	± ---
ANGULAR ± 3 °		

DRAFT WHERE APPLICABLE MUST REMAIN WITHIN DIMENSIONS

DIMENSION STYLE: MM ONLY	SCALE: NTS	DESIGN UNITS: METRIC	THIRD ANGLE PROJECTION
DRAWN BY: KCHO	DATE: 2004/11/05	TITLE: 2.54MM PITCH DUAL ROW HEADER SINGLE WAFER, T/H	
CHECKED BY: PTLIM	DATE: 2004/12/08		
APPROVED BY: SCLOW	DATE: 2004/12/10	molex MOLEX INCORPORATED	
MATERIAL NO.: SEE TABLE		DOCUMENT NO.: SD-87914-013	SHEET NO.: 1 OF 46
SIZE: A3			

THIS DRAWING CONTAINS INFORMATION THAT IS PROPRIETARY TO MOLEX INCORPORATED AND SHOULD NOT BE USED WITHOUT WRITTEN PERMISSION

P/N	CKT SIZE	F	So	W	QTY/ REEL
87914-0627	06	11.50	-	24.00	250
87914-0827	08	11.50	-	24.00	250

FOR TAPE WIDTH WITH SINGLE ROW SPROCKET HOLES.

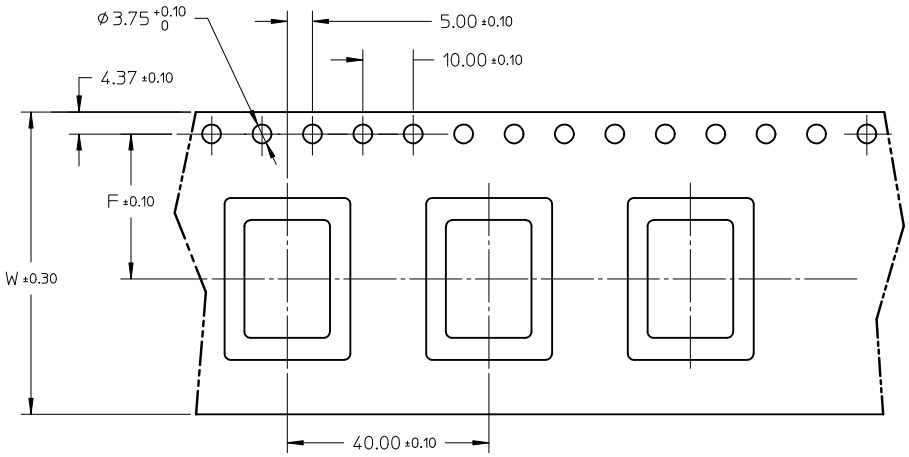

CUSTOMER
PULL OUT DIRECTION

FOR TAPE WIDTH WITH 2 ROWS OF SPROCKET HOLES.

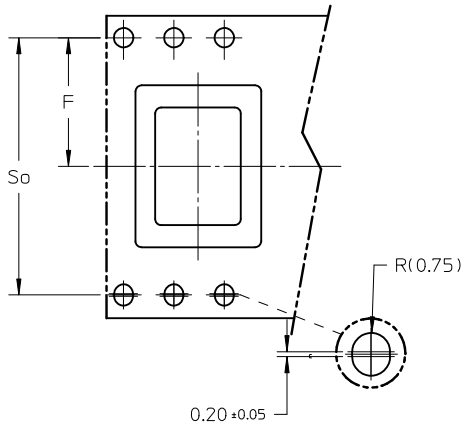

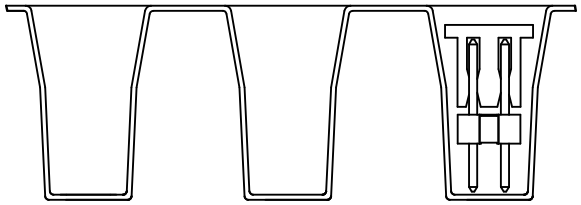

VIEW OF PART ORIENTATION
IN TAPE & REEL

NOTES:

1. LEADER AND TRAILER TAPE

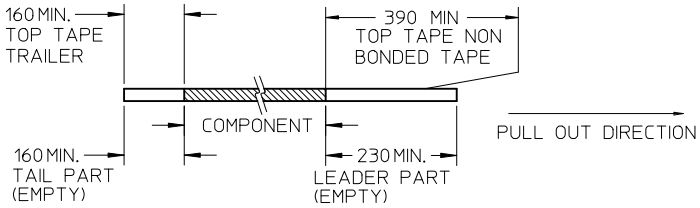

2. PEELING OFF FORCE OF THE TOP TAPE: 20 - 80gf.
(PEELING DIRECTION AS SHOWN IN FOLLOWING FIGURE)

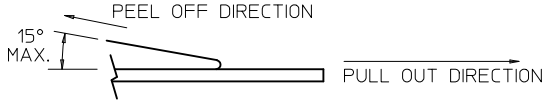

3. TAPE AND REEL SPECIFICATION IS AS PER EIA-481.
4. THE TAPE IS TREATED FOR ANTI-STATIC.

PG8, +879140108	2010/02/11	
EC NO: S2010-0695	2004/12/08	
DRWN:ATSEE	2010/06/05	
CH'KD:PTLIM		
APPR:MLONG		
D7	DESCRIPTION	REV

QUALITY SYMBOLS
F_A=0
F_C=0
F_P=0

GENERAL TOLERANCES (UNLESS SPECIFIED)

	mm	INCH
4 PLACES	± ---	± ---
3 PLACES	± ---	± ---
2 PLACES	± 0.20	± ---
1 PLACE	± ---	± ---
ANGULAR ± 3 °		

DRAFT WHERE APPLICABLE MUST REMAIN WITHIN DIMENSIONS

DIMENSION STYLE: MM ONLY
SCALE: NTS
DESIGN UNITS: METRIC
THIRD ANGLE PROJECTION

DRAWN BY	KCHO	DATE 2004/11/05
CHECKED BY	PTLIM	DATE 2004/12/08
APPROVED BY	SCLOW	DATE 2004/12/10

TITLE: 2.54MM PITCH DUAL ROW HEADER SINGLE WAFER, T/H

molex MOLEX INCORPORATED

MATERIAL NO.: SEE TABLE
DOCUMENT NO.: SD-87914-013
SHEET NO.: 2 OF 46
SIZE: A3

THIS DRAWING CONTAINS INFORMATION THAT IS PROPRIETARY TO MOLEX INCORPORATED AND SHOULD NOT BE USED WITHOUT WRITTEN PERMISSION

PART NO FOR TRAY PACKAGING	PART NO. FOR TUBE WITHOUT CAP PACKAGING	PART NO. FOR TUBE WITH CAP PACKAGING	PART NO. FOR TAPE & REEL WITHOUT CAP PACKAGING	PART NO. FOR TAPE & REEL WITH CAP PACKAGING	CKT SIZE	VOID POSITION	PLATING TYPE	DIMENSION				
								A	B	F	M	P
87914-0211	--------	--------	--------	--------	2	-----	1	2.54	----	10.92	5.84	2.79
87914-0221	--------	--------	--------	--------	2	-----	1	2.54	----	12.25	7.00	2.96
87914-0231	--------	--------	--------	--------	2	-----	1	2.54	----	13.38	6.09	5.00
87914-0212	--------	--------	--------	--------	2	-----	2	2.54	----	10.92	5.84	2.79
87914-0222	--------	--------	--------	--------	2	-----	2	2.54	----	12.25	7.00	2.96
87914-0232	--------	--------	--------	--------	2	-----	2	2.54	----	13.38	6.09	5.00
87914-0213	--------	--------	--------	--------	2	-----	3	2.54	----	10.92	5.84	2.79
87914-0223	--------	--------	--------	--------	2	-----	3	2.54	----	12.25	7.00	2.96
87914-0233	--------	--------	--------	--------	2	-----	3	2.54	----	13.38	6.09	5.00
87914-0214	--------	--------	--------	--------	2	-----	4	2.54	----	10.92	5.84	2.79
87914-0224	--------	--------	--------	--------	2	-----	4	2.54	----	12.25	7.00	2.96
87914-0234	--------	--------	--------	--------	2	-----	4	2.54	----	13.38	6.09	5.00
87914-0215	--------	--------	--------	--------	2	-----	5	2.54	----	10.92	5.84	2.79
87914-0225	--------	--------	--------	--------	2	-----	5	2.54	----	12.25	7.00	2.96
87914-0235	--------	--------	--------	--------	2	-----	5	2.54	----	13.38	6.09	5.00
87914-0216	--------	--------	--------	--------	2	-----	6	2.54	----	10.92	5.84	2.79
87914-0226	--------	--------	--------	--------	2	-----	6	2.54	----	12.25	7.00	2.96
87914-0236	--------	--------	--------	--------	2	-----	6	2.54	----	13.38	6.09	5.00

PG8, +879140108
EC NO: S2010-0695
DRWN:ATSEE 2010/02/11
CH'KD:PTLIM 2004/12/08
APPR:MLONG 2010/06/05
D7

DESCRIPTION
REV

QUALITY SYMBOLS
FA=0
FC=0
FP=0

GENERAL TOLERANCES (UNLESS SPECIFIED)

	mm	INCH
4 PLACES	± ---	± ---
3 PLACES	± ---	± ---
2 PLACES	± 0.20	± ---
1 PLACE	± ---	± ---
ANGULAR ± 3 °		

DRAFT WHERE APPLICABLE MUST REMAIN WITHIN DIMENSIONS

DIMENSION STYLE: MM ONLY
SCALE: NTS
DESIGN UNITS: METRIC
THIRD ANGLE PROJECTION

DRAWN BY: KCHO DATE: 2004/11/05
CHECKED BY: PTLIM DATE: 2004/12/08
APPROVED BY: SCLOW DATE: 2004/12/10

TITLE: 2.54MM PITCH DUAL ROW HEADER SINGLE WAFER, T/H

molex MOLEX INCORPORATED

MATERIAL NO.: SEE TABLE
DOCUMENT NO.: SD-87914-013
SHEET NO.: 3 OF 46
SIZE: A3

THIS DRAWING CONTAINS INFORMATION THAT IS PROPRIETARY TO MOLEX INCORPORATED AND SHOULD NOT BE USED WITHOUT WRITTEN PERMISSION

tb_frame_A3_P_AM_T
Rev. F 2009/06/18

PART NO FOR TRAY PACKAGING	PART NO. FOR TUBE WITHOUT CAP PACKAGING	PART NO. FOR TUBE WITH CAP PACKAGING	PART NO. FOR TAPE & REEL WITHOUT CAP PACKAGING	PART NO. FOR TAPE & REEL WITH CAP PACKAGING	CKT SIZE	VOID POSITION	PLATING TYPE	DIMENSION				
								A	B	F	M	P
87914-0411	-------	-------	-------	-------	4	-----	1	5.08	2.54	10.92	5.84	2.79
87914-0421	-------	-------	-------	-------	4	-----	1	5.08	2.54	12.25	7.00	2.96
87914-0431	-------	-------	-------	-------	4	-----	1	5.08	2.54	13.38	6.09	5.00
87914-0412	-------	-------	-------	-------	4	-----	2	5.08	2.54	10.92	5.84	2.79
87914-0422	-------	-------	-------	-------	4	-----	2	5.08	2.54	12.25	7.00	2.96
87914-0432	-------	-------	-------	-------	4	-----	2	5.08	2.54	13.38	6.09	5.00
87914-0413	-------	-------	-------	-------	4	-----	3	5.08	2.54	10.92	5.84	2.79
87914-0423	-------	-------	-------	-------	4	-----	3	5.08	2.54	12.25	7.00	2.96
87914-0433	-------	-------	-------	-------	4	-----	3	5.08	2.54	13.38	6.09	5.00
87914-0414	-------	-------	-------	-------	4	-----	4	5.08	2.54	10.92	5.84	2.79
87914-0424	-------	-------	-------	-------	4	-----	4	5.08	2.54	12.25	7.00	2.96
87914-0434	-------	-------	-------	-------	4	-----	4	5.08	2.54	13.38	6.09	5.00
87914-0415	-------	-------	-------	-------	4	-----	5	5.08	2.54	10.92	5.84	2.79
87914-0425	-------	-------	-------	-------	4	-----	5	5.08	2.54	12.25	7.00	2.96
87914-0435	-------	-------	-------	-------	4	-----	5	5.08	2.54	13.38	6.09	5.00
87914-0416	-------	-------	-------	-------	4	-----	6	5.08	2.54	10.92	5.84	2.79
87914-0426	-------	-------	-------	-------	4	-----	6	5.08	2.54	12.25	7.00	2.96
87914-0436	-------	-------	-------	-------	4	-----	6	5.08	2.54	13.38	6.09	5.00

PG8, +879140108
EC NO: S2010-0695
DRWN:ATSEE 2010/02/11
CH'KD:PTLIM 2004/12/08
APPR:MLONG 2010/06/05
D7
DESCRIPTION
REV

QUALITY SYMBOLS
FA=0
FC=0
FP=0

GENERAL TOLERANCES (UNLESS SPECIFIED)

	mm	INCH
4 PLACES	± ---	± ---
3 PLACES	± ---	± ---
2 PLACES	± 0.20	± ---
1 PLACE	± ---	± ---

ANGULAR ± 3 °

DRAFT WHERE APPLICABLE MUST REMAIN WITHIN DIMENSIONS

DIMENSION STYLE: MM ONLY
SCALE: NTS
DESIGN UNITS: METRIC
THIRD ANGLE PROJECTION

DRAWN BY: KCHO DATE: 2004/11/05
CHECKED BY: PTLIM DATE: 2004/12/08
APPROVED BY: SCLOW DATE: 2004/12/10

TITLE: 2.54MM PITCH DUAL ROW HEADER SINGLE WAFER, T/H

molex MOLEX INCORPORATED

MATERIAL NO.: SEE TABLE
DOCUMENT NO.: SD-87914-013
SHEET NO.: 4 OF 46
SIZE: A3

THIS DRAWING CONTAINS INFORMATION THAT IS PROPRIETARY TO MOLEX INCORPORATED AND SHOULD NOT BE USED WITHOUT WRITTEN PERMISSION

PART NO FOR TRAY PACKAGING	PART NO. FOR TUBE WITHOUT CAP PACKAGING	PART NO. FOR TUBE WITH CAP PACKAGING	PART NO. FOR TAPE & REEL WITHOUT CAP PACKAGING	PART NO. FOR TAPE & REEL WITH CAP PACKAGING	CKT SIZE	VOID POSITION	PLATING TYPE	DIMENSION					
								A	B	F	M	P	G
87914-0611	-------	-------	-------	-------	6	-----	1	7.62	5.08	10.92	5.84	2.79	----
87914-0621	-------	-------	-------	-------	6	-----	1	7.62	5.08	12.25	7.00	2.96	----
87914-0631	-------	-------	-------	-------	6	-----	1	7.62	5.08	13.38	6.09	5.00	----
87914-0612	-------	-------	-------	-------	6	-----	2	7.62	5.08	10.92	5.84	2.79	----
87914-0622	-------	-------	-------	-------	6	-----	2	7.62	5.08	12.25	7.00	2.96	----
87914-0632	-------	-------	-------	-------	6	-----	2	7.62	5.08	13.38	6.09	5.00	----
87914-0613	-------	-------	-------	-------	6	-----	3	7.62	5.08	10.92	5.84	2.79	----
87914-0623	-------	-------	-------	-------	6	-----	3	7.62	5.08	12.25	7.00	2.96	----
87914-0633	-------	-------	-------	-------	6	-----	3	7.62	5.08	13.38	6.09	5.00	----
87914-0614	-------	-------	-------	-------	6	-----	4	7.62	5.08	10.92	5.84	2.79	----
87914-0624	-------	-------	-------	-------	6	-----	4	7.62	5.08	12.25	7.00	2.96	----
87914-0634	-------	-------	-------	-------	6	-----	4	7.62	5.08	13.38	6.09	5.00	----
87914-0615	-------	-------	-------	-------	6	-----	5	7.62	5.08	10.92	5.84	2.79	----
87914-0625	-------	-------	-------	-------	6	-----	5	7.62	5.08	12.25	7.00	2.96	----
87914-0635	-------	-------	-------	-------	6	-----	5	7.62	5.08	13.38	6.09	5.00	----
87914-0616	-------	-------	-------	-------	6	-----	6	7.62	5.08	10.92	5.84	2.79	----
87914-0626	-------	-------	-------	-------	6	-----	6	7.62	5.08	12.25	7.00	2.96	----
87914-0636	-------	-------	-------	-------	6	-----	6	7.62	5.08	13.38	6.09	5.00	----
-------	-------	-------	-------	87914-0627	6	-----	6	7.62	5.08	13.55	8.08	3.18	14.70

PG8, +879140108
EC NO: S2010-0695
DRWN:ATSEE 2010/02/11
CH'KD:PTLIM 2004/12/08
APPR:MLONG 2010/06/05
D7

DESCRIPTION
REV

QUALITY SYMBOLS
FA=0
FC=0
FP=0

GENERAL TOLERANCES (UNLESS SPECIFIED)

	mm	INCH
4 PLACES	± ---	± ---
3 PLACES	± ---	± ---
2 PLACES	± 0.20	± ---
1 PLACE	± ---	± ---
ANGULAR ± 3 °		

DRAFT WHERE APPLICABLE MUST REMAIN WITHIN DIMENSIONS

DIMENSION STYLE: MM ONLY
SCALE: NTS
DESIGN UNITS: METRIC
THIRD ANGLE PROJECTION

DRAWN BY: KCHO DATE: 2004/11/05
CHECKED BY: PTLIM DATE: 2004/12/08
APPROVED BY: SCLOW DATE: 2004/12/10

TITLE: 2.54MM PITCH DUAL ROW HEADER SINGLE WAFER, T/H

molex MOLEX INCORPORATED

MATERIAL NO.: SEE TABLE
DOCUMENT NO.: SD-87914-013
SHEET NO.: 5 OF 46
SIZE: A3

THIS DRAWING CONTAINS INFORMATION THAT IS PROPRIETARY TO MOLEX INCORPORATED AND SHOULD NOT BE USED WITHOUT WRITTEN PERMISSION

tb_frame_A3_P_AM_T
Rev. F 2009/06/18

PART NO FOR TRAY PACKAGING	PART NO. FOR TUBE WITHOUT CAP PACKAGING	PART NO. FOR TUBE WITH CAP PACKAGING	PART NO. FOR TAPE & REEL WITHOUT CAP PACKAGING	PART NO. FOR TAPE & REEL WITH CAP PACKAGING	CKT SIZE	VOID POSITION	PLATING TYPE	DIMENSION				
								A	B	F	M	P
87914-0009	-------	-------	-------	-------	6	-----	1	7.62	5.08	18.84	13.25	3.30
87914-0642	-------	-------	-------	-------	6	-----	2	7.62	5.08	18.84	13.25	3.30
87914-0643	-------	-------	-------	-------	6	-----	3	7.62	5.08	18.84	13.25	3.30
87914-0644	-------	-------	-------	-------	6	-----	4	7.62	5.08	18.84	13.25	3.30
87914-0645	-------	-------	-------	-------	6	-----	5	7.62	5.08	18.84	13.25	3.30
87914-0646	-------	-------	-------	-------	6	-----	6	7.62	5.08	18.84	13.25	3.30

PG8, +879140108
EC NO: S2010-0695
DRWN:ATSEE 2010/02/11
CH'KD:PTLIM 2004/12/08
APPR:MLONG 2010/06/05
D7

DESCRIPTION
REV

QUALITY SYMBOLS
FA=0
FC=0
FP=0

GENERAL TOLERANCES (UNLESS SPECIFIED)

	mm	INCH
4 PLACES	± ---	± ---
3 PLACES	± ---	± ---
2 PLACES	± 0.20	± ---
1 PLACE	± ---	± ---

ANGULAR ± 3 °

DRAFT WHERE APPLICABLE MUST REMAIN WITHIN DIMENSIONS

DIMENSION STYLE: MM ONLY
SCALE: NTS
DESIGN UNITS: METRIC
THIRD ANGLE PROJECTION

DRAWN BY: KCHO DATE: 2004/11/05
CHECKED BY: PTLIM DATE: 2004/12/08
APPROVED BY: SCLOW DATE: 2004/12/10

TITLE: 2.54MM PITCH DUAL ROW HEADER SINGLE WAFER, T/H

molex MOLEX INCORPORATED

MATERIAL NO.: SEE TABLE
DOCUMENT NO.: SD-87914-013
SHEET NO.: 6 OF 46
SIZE: A3

THIS DRAWING CONTAINS INFORMATION THAT IS PROPRIETARY TO MOLEX INCORPORATED AND SHOULD NOT BE USED WITHOUT WRITTEN PERMISSION

PART NO FOR TRAY PACKAGING	PART NO. FOR TUBE WITHOUT CAP PACKAGING	PART NO. FOR TUBE WITH CAP PACKAGING	PART NO. FOR TAPE & REEL WITHOUT CAP PACKAGING	PART NO. FOR TAPE & REEL WITH CAP PACKAGING	CKT SIZE	VOID POSITION	PLATING TYPE	DIMENSION					
								A	B	F	M	P	G
87914-0811	-------	-------	-------	-------	8	-------	1	10.16	7.62	10.92	5.84	2.79	----
87914-0821	-------	-------	-------	-------	8	-------	1	10.16	7.62	12.25	7.00	2.96	----
87914-0831	-------	-------	-------	-------	8	-------	1	10.16	7.62	13.38	6.09	5.00	----
87914-0812	-------	-------	-------	-------	8	-------	2	10.16	7.62	10.92	5.84	2.79	----
87914-0822	-------	-------	-------	-------	8	-------	2	10.16	7.62	12.25	7.00	2.96	----
87914-0832	-------	-------	-------	-------	8	-------	2	10.16	7.62	13.38	6.09	5.00	----
87914-0813	-------	-------	-------	-------	8	-------	3	10.16	7.62	10.92	5.84	2.79	----
87914-0823	-------	-------	-------	-------	8	-------	3	10.16	7.62	12.25	7.00	2.96	----
87914-0833	-------	-------	-------	-------	8	-------	4	10.16	7.62	13.38	6.09	5.00	----
87914-0814	-------	-------	-------	-------	8	-------	4	10.16	7.62	10.92	5.84	2.79	----
87914-0824	-------	-------	-------	-------	8	-------	4	10.16	7.62	12.25	7.00	2.96	----
87914-0834	-------	-------	-------	-------	8	-------	4	10.16	7.62	13.38	6.09	5.00	----
87914-0815	-------	-------	-------	-------	8	-------	5	10.16	7.62	10.92	5.84	2.79	----
87914-0825	-------	-------	-------	-------	8	-------	5	10.16	7.62	12.25	7.00	2.96	----
87914-0835	-------	-------	-------	-------	8	-------	5	10.16	7.62	13.38	6.09	5.00	----
87914-0816	-------	-------	-------	-------	8	-------	6	10.16	7.62	10.92	5.84	2.79	----
87914-0826	-------	-------	-------	-------	8	-------	6	10.16	7.62	12.25	7.00	2.96	----
87914-0836	-------	-------	-------	-------	8	-------	6	10.16	7.62	13.38	6.09	5.00	----
87914-0807	-------	-------	-------	-------	8	2,3,4,5,6,8	6	10.16	7.62	21.75	16.51	2.95	----
-------	-------	-------	-------	87914-0827	8	-------	6	10.16	7.62	13.55	8.08	3.18	14.70

PG8, +879140108
EC NO: S2010-0695
DRWN:ATSEE 2010/02/11
CH'KD:PTLIM 2004/12/08
APPR:MLONG 2010/06/05
D7
DESCRIPTION
REV

QUALITY SYMBOLS
FA=0
FC=0
FP=0

GENERAL TOLERANCES (UNLESS SPECIFIED)

	mm	INCH
4 PLACES	± ---	± ---
3 PLACES	± ---	± ---
2 PLACES	± 0.20	± ---
1 PLACE	± ---	± ---

ANGULAR ± 3 °

DRAFT WHERE APPLICABLE MUST REMAIN WITHIN DIMENSIONS

DIMENSION STYLE: MM ONLY
SCALE: NTS
DESIGN UNITS: METRIC
THIRD ANGLE PROJECTION

DRAWN BY: KCHO DATE: 2004/11/05
CHECKED BY: PTLIM DATE: 2004/12/08
APPROVED BY: SCLOW DATE: 2004/12/10

TITLE: 2.54MM PITCH DUAL ROW HEADER SINGLE WAFER, T/H

molex MOLEX INCORPORATED

MATERIAL NO.: SEE TABLE
DOCUMENT NO.: SD-87914-013
SHEET NO.: 7 OF 46
SIZE: A3

THIS DRAWING CONTAINS INFORMATION THAT IS PROPRIETARY TO MOLEX INCORPORATED AND SHOULD NOT BE USED WITHOUT WRITTEN PERMISSION

PART NO FOR TRAY PACKAGING	PART NO. FOR TUBE WITHOUT CAP PACKAGING	PART NO. FOR TUBE WITH CAP PACKAGING	PART NO. FOR TAPE & REEL WITHOUT CAP PACKAGING	PART NO. FOR TAPE & REEL WITH CAP PACKAGING	CKT SIZE	VOID POSITION	PLATING TYPE	DIMENSION				
								A	B	F	M	P
87914-0841	-------	-------	-------	-------	8	-----	1	10.16	7.62	13.51	8.75	2.47
87914-0842	-------	-------	-------	-------	8	-----	2	10.16	7.62	13.51	8.75	2.47
87914-0843	-------	-------	-------	-------	8	-----	3	10.16	7.62	13.51	8.75	2.47
87914-0844	-------	-------	-------	-------	8	-----	4	10.16	7.62	13.51	8.75	2.47
87914-0845	-------	-------	-------	-------	8	-----	5	10.16	7.62	13.51	8.75	2.47
87914-0005	-------	-------	-------	-------	8	-----	6	10.16	7.62	13.51	8.75	2.47
87914-0108	-------	-------	-------	-------	8	-----	6	10.16	7.62	16.50	11.11	3.10

PG8, +879140108
EC NO: S2010-0695
DRWN:ATSEE 2010/02/11
CH'KD:PTLIM 2004/12/08
APPR:MLONG 2010/06/05
D7

DESCRIPTION
REV

QUALITY SYMBOLS
F/A=0
F/C=0
F/P=0

GENERAL TOLERANCES (UNLESS SPECIFIED)

	mm	INCH
4 PLACES	± ---	± ---
3 PLACES	± ---	± ---
2 PLACES	± 0.20	± ---
1 PLACE	± ---	± ---
ANGULAR ± 3 °		

DRAFT WHERE APPLICABLE MUST REMAIN WITHIN DIMENSIONS

DIMENSION STYLE: MM ONLY
SCALE: NTS
DESIGN UNITS: METRIC
THIRD ANGLE PROJECTION

DRAWN BY: KCHO DATE: 2004/11/05
CHECKED BY: PTLIM DATE: 2004/12/08
APPROVED BY: SCLOW DATE: 2004/12/10

TITLE: 2.54MM PITCH DUAL ROW HEADER SINGLE WAFER, T/H

molex MOLEX INCORPORATED

MATERIAL NO.: SEE TABLE
DOCUMENT NO.: SD-87914-013
SHEET NO.: 8 OF 46
SIZE: A3

THIS DRAWING CONTAINS INFORMATION THAT IS PROPRIETARY TO MOLEX INCORPORATED AND SHOULD NOT BE USED WITHOUT WRITTEN PERMISSION

tb_frame_A3_P_AM_T
Rev. F 2009/06/18

PART NO FOR TRAY PACKAGING	PART NO. FOR TUBE WITHOUT CAP PACKAGING	PART NO. FOR TUBE WITH CAP PACKAGING	PART NO. FOR TAPE & REEL WITHOUT CAP PACKAGING	PART NO. FOR TAPE & REEL WITH CAP PACKAGING	PART NO. FOR BULK PACKAGING	CKT SIZE	VOID POSITION	PLATING TYPE	DIMENSION					
									A	B	F	M	P	G
87914-1011	-------	-------	-------	-------	-------	10	-----	1	12.70	10.16	10.92	5.84	2.79	----
87914-1021	-------	-------	-------	-------	-------	10	-----	1	12.70	10.16	12.25	7.00	2.96	----
87914-1031	-------	-------	-------	-------	-------	10	-----	1	12.70	10.16	13.38	6.09	5.00	----
87914-1012	-------	-------	-------	-------	-------	10	-----	2	12.70	10.16	10.92	5.84	2.79	----
87914-1022	-------	-------	-------	-------	-------	10	-----	2	12.70	10.16	12.25	7.00	2.96	----
87914-1032	-------	-------	-------	-------	-------	10	-----	2	12.70	10.16	13.38	6.09	5.00	----
87914-1013	-------	-------	-------	-------	-------	10	-----	3	12.70	10.16	10.92	5.84	2.79	----
87914-1023	-------	-------	-------	-------	-------	10	-----	3	12.70	10.16	12.25	7.00	2.96	----
87914-1033	-------	-------	-------	-------	-------	10	-----	3	12.70	10.16	13.38	6.09	5.00	----
87914-1014	-------	-------	-------	-------	-------	10	-----	4	12.70	10.16	10.92	5.84	2.79	----
87914-1024	-------	-------	-------	-------	-------	10	-----	4	12.70	10.16	12.25	7.00	2.96	----
87914-1034	-------	-------	-------	-------	-------	10	-----	4	12.70	10.16	13.38	6.09	5.00	----
87914-1015	-------	-------	-------	-------	-------	10	-----	5	12.70	10.16	10.92	5.84	2.79	----
87914-1025	-------	-------	-------	-------	-------	10	-----	5	12.70	10.16	12.25	7.00	2.96	----
87914-1035	-------	-------	-------	-------	-------	10	-----	5	12.70	10.16	13.38	6.09	5.00	----
87914-1016	-------	-------	-------	-------	-------	10	-----	6	12.70	10.16	10.92	5.84	2.79	----
87914-1026	-------	-------	-------	-------	-------	10	-----	6	12.70	10.16	12.25	7.00	2.96	----
87914-1036	-------	-------	-------	-------	-------	10	-----	6	12.70	10.16	13.38	6.09	5.00	----
87914-0001	-------	-------	-------	-------	-------	10	-----	7	12.70	10.16	12.07	5.97	3.81	----
-------	-------	-------	-------	-------	87914-1037	10	9	4	12.70	10.16	10.92	5.84	2.79	----

PG8, +879140108
EC NO: S2010-0695
DRWN:ATSEE 2010/02/11
CH'KD:PTLIM 2004/12/08
APPR:MLONG 2010/06/05
D7

DESCRIPTION
REV

QUALITY SYMBOLS
F_A=0
F_C=0
F_P=0

GENERAL TOLERANCES (UNLESS SPECIFIED)

	mm	INCH
4 PLACES	± ---	± ---
3 PLACES	± ---	± ---
2 PLACES	± 0.20	± ---
1 PLACE	± ---	± ---
ANGULAR ± 3 °		

DRAFT WHERE APPLICABLE MUST REMAIN WITHIN DIMENSIONS

DIMENSION STYLE: MM ONLY
SCALE: NTS
DESIGN UNITS: METRIC
THIRD ANGLE PROJECTION

DRAWN BY: KCHO DATE: 2004/11/05
CHECKED BY: PTLIM DATE: 2004/12/08
APPROVED BY: SCLOW DATE: 2004/12/10

TITLE: 2.54MM PITCH DUAL ROW HEADER SINGLE WAFER, T/H

molex MOLEX INCORPORATED

MATERIAL NO.: SEE TABLE
DOCUMENT NO.: SD-87914-013
SHEET NO.: 9 OF 46
SIZE: A3

THIS DRAWING CONTAINS INFORMATION THAT IS PROPRIETARY TO MOLEX INCORPORATED AND SHOULD NOT BE USED WITHOUT WRITTEN PERMISSION

PART NO FOR TRAY PACKAGING	PART NO. FOR TUBE WITHOUT CAP PACKAGING	PART NO. FOR TUBE WITH CAP PACKAGING	PART NO. FOR TAPE & REEL WITHOUT CAP PACKAGING	PART NO. FOR TAPE & REEL WITH CAP PACKAGING	CKT SIZE	VOID POSITION	PLATING TYPE	DIMENSION				
								A	B	F	M	P
87914-1211	-------	-------	-------	-------	12	-----	1	15.24	12.70	10.92	5.84	2.79
87914-1221	-------	-------	-------	-------	12	-----	1	15.24	12.70	12.25	7.00	2.96
87914-1231	-------	-------	-------	-------	12	-----	1	15.24	12.70	13.38	6.09	5.00
87914-1212	-------	-------	-------	-------	12	-----	2	15.24	12.70	10.92	5.84	2.79
87914-1222	-------	-------	-------	-------	12	-----	2	15.24	12.70	12.25	7.00	2.96
87914-1232	-------	-------	-------	-------	12	-----	2	15.24	12.70	13.38	6.09	5.00
87914-1213	-------	-------	-------	-------	12	-----	3	15.24	12.70	10.92	5.84	2.79
87914-1223	-------	-------	-------	-------	12	-----	3	15.24	12.70	12.25	7.00	2.96
87914-1233	-------	-------	-------	-------	12	-----	3	15.24	12.70	13.38	6.09	5.00
87914-1214	-------	-------	-------	-------	12	-----	4	15.24	12.70	10.92	5.84	2.79
87914-1224	-------	-------	-------	-------	12	-----	4	15.24	12.70	12.25	7.00	2.96
87914-1234	-------	-------	-------	-------	12	-----	4	15.24	12.70	13.38	6.09	5.00
87914-1215	-------	-------	-------	-------	12	-----	5	15.24	12.70	10.92	5.84	2.79
87914-1225	-------	-------	-------	-------	12	-----	5	15.24	12.70	12.25	7.00	2.96
87914-1235	-------	-------	-------	-------	12	-----	5	15.24	12.70	13.38	6.09	5.00
87914-1216	-------	-------	-------	-------	12	-----	6	15.24	12.70	10.92	5.84	2.79
87914-1226	-------	-------	-------	-------	12	-----	6	15.24	12.70	12.25	7.00	2.96
87914-1236	-------	-------	-------	-------	12	-----	6	15.24	12.70	13.38	6.09	5.00

PG8, +879140108
EC NO: S2010-0695
DRWN:ATSEE 2010/02/11
CH'KD:PTLIM 2004/12/08
APPR:MLONG 2010/06/05
D7

DESCRIPTION
REV

QUALITY SYMBOLS
F/A=0
F/C=0
F/P=0

GENERAL TOLERANCES (UNLESS SPECIFIED)

	mm	INCH
4 PLACES	± ---	± ---
3 PLACES	± ---	± ---
2 PLACES	± 0.20	± ---
1 PLACE	± ---	± ---

ANGULAR ± 3 °

DRAFT WHERE APPLICABLE MUST REMAIN WITHIN DIMENSIONS

DIMENSION STYLE: MM ONLY
SCALE: NTS
DESIGN UNITS: METRIC
THIRD ANGLE PROJECTION

DRAWN BY: KCHO DATE: 2004/11/05
CHECKED BY: PTLIM DATE: 2004/12/08
APPROVED BY: SCLOW DATE: 2004/12/10

TITLE: 2.54MM PITCH DUAL ROW HEADER SINGLE WAFER, T/H

molex MOLEX INCORPORATED

MATERIAL NO.: SEE TABLE
DOCUMENT NO.: SD-87914-013
SHEET NO.: 10 OF 46
SIZE: A3

THIS DRAWING CONTAINS INFORMATION THAT IS PROPRIETARY TO MOLEX INCORPORATED AND SHOULD NOT BE USED WITHOUT WRITTEN PERMISSION

PART NO FOR TRAY PACKAGING	PART NO. FOR TUBE WITHOUT CAP PACKAGING	PART NO. FOR TUBE WITH CAP PACKAGING	PART NO. FOR TAPE & REEL WITHOUT CAP PACKAGING	PART NO. FOR TAPE & REEL WITH CAP PACKAGING	CKT SIZE	VOID POSITION	PLATING TYPE	DIMENSION				
								A	B	F	M	P
87914-1251	-------	-------	-------	-------	12	-----	1	15.24	12.70	18.40	13.08	3.03
87914-1252	-------	-------	-------	-------	12	-----	2	15.24	12.70	18.40	13.08	3.03
87914-1253	-------	-------	-------	-------	12	-----	3	15.24	12.70	18.40	13.08	3.03
87914-1254	-------	-------	-------	-------	12	-----	4	15.24	12.70	18.40	13.08	3.03
87914-1255	-------	-------	-------	-------	12	-----	5	15.24	12.70	18.40	13.08	3.03
87914-1256	-------	-------	-------	-------	12	-----	6	15.24	12.70	18.40	13.08	3.03
87914-1241	-------	-------	-------	-------	12	-----	1	15.24	12.70	12.50	6.95	3.26
87914-1242	-------	-------	-------	-------	12	-----	2	15.24	12.70	12.50	6.95	3.26
87914-1243	-------	-------	-------	-------	12	-----	3	15.24	12.70	12.50	6.95	3.26
87914-1244	-------	-------	-------	-------	12	-----	4	15.24	12.70	12.50	6.95	3.26
87914-1245	-------	-------	-------	-------	12	-----	5	15.24	12.70	12.50	6.95	3.26

PG8, +879140108
EC NO: S2010-0695
DRWN:ATSEE 2010/02/11
CH'KD:PTLIM 2004/12/08
APPR:MLONG 2010/06/05
D7

DESCRIPTION
REV

QUALITY SYMBOLS
F_A=0
F_C=0
F_P=0

GENERAL TOLERANCES (UNLESS SPECIFIED)

	mm	INCH
4 PLACES	± ---	± ---
3 PLACES	± ---	± ---
2 PLACES	± 0.20	± ---
1 PLACE	± ---	± ---

ANGULAR ± 3 °

DRAFT WHERE APPLICABLE MUST REMAIN WITHIN DIMENSIONS

DIMENSION STYLE: MM ONLY
SCALE: NTS
DESIGN UNITS: METRIC
THIRD ANGLE PROJECTION

DRAWN BY: KCHO DATE: 2004/11/05
CHECKED BY: PTLIM DATE: 2004/12/08
APPROVED BY: SCLOW DATE: 2004/12/10

TITLE: 2.54MM PITCH DUAL ROW HEADER SINGLE WAFER, T/H

molex MOLEX INCORPORATED

MATERIAL NO.: SEE TABLE
DOCUMENT NO.: SD-87914-013
SHEET NO.: 11 OF 46
SIZE: A3

THIS DRAWING CONTAINS INFORMATION THAT IS PROPRIETARY TO MOLEX INCORPORATED AND SHOULD NOT BE USED WITHOUT WRITTEN PERMISSION

PART NO FOR TRAY PACKAGING	PART NO. FOR TUBE WITHOUT CAP PACKAGING	PART NO. FOR TUBE WITH CAP PACKAGING	PART NO. FOR TAPE & REEL WITHOUT CAP PACKAGING	PART NO. FOR TAPE & REEL WITH CAP PACKAGING	CKT SIZE	VOID POSITION	PLATING TYPE	DIMENSION				
								A	B	F	M	P
87914-1411	-------	-------	-------	-------	14	-----	1	17.78	15.24	10.92	5.84	2.79
87914-1421	-------	-------	-------	-------	14	-----	1	17.78	15.24	12.25	7.00	2.96
87914-1431	-------	-------	-------	-------	14	-----	1	17.78	15.24	13.38	6.09	5.00
87914-1412	-------	-------	-------	-------	14	-----	2	17.78	15.24	10.92	5.84	2.79
87914-1422	-------	-------	-------	-------	14	-----	2	17.78	15.24	12.25	7.00	2.96
87914-1432	-------	-------	-------	-------	14	-----	2	17.78	15.24	13.38	6.09	5.00
87914-1413	-------	-------	-------	-------	14	-----	3	17.78	15.24	10.92	5.84	2.79
87914-1423	-------	-------	-------	-------	14	-----	3	17.78	15.24	12.25	7.00	2.96
87914-1433	-------	-------	-------	-------	14	-----	3	17.78	15.24	13.38	6.09	5.00
87914-1414	-------	-------	-------	-------	14	-----	4	17.78	15.24	10.92	5.84	2.79
87914-1424	-------	-------	-------	-------	14	-----	4	17.78	15.24	12.25	7.00	2.96
87914-1434	-------	-------	-------	-------	14	-----	4	17.78	15.24	13.38	6.09	5.00
87914-1415	-------	-------	-------	-------	14	-----	5	17.78	15.24	10.92	5.84	2.79
87914-1425	-------	-------	-------	-------	14	-----	5	17.78	15.24	12.25	7.00	2.96
87914-1435	-------	-------	-------	-------	14	-----	5	17.78	15.24	13.38	6.09	5.00
87914-1416	-------	-------	-------	-------	14	-----	6	17.78	15.24	10.92	5.84	2.79
87914-1426	-------	-------	-------	-------	14	-----	6	17.78	15.24	12.25	7.00	2.96
87914-1436	-------	-------	-------	-------	14	-----	6	17.78	15.24	13.38	6.09	5.00
87914-0007	-------	-------	-------	-------	14	-----	6	17.78	15.24	13.42	8.08	3.05

PG8, +879140108
EC NO: S2010-0695
DRWN:ATSEE 2010/02/11
CH'KD:PTLIM 2004/12/08
APPR:MLONG 2010/06/05
D7

REV | DESCRIPTION

QUALITY SYMBOLS
F/A=0
F/C=0
F/P=0

GENERAL TOLERANCES (UNLESS SPECIFIED)

	mm	INCH
4 PLACES	± ---	± ---
3 PLACES	± ---	± ---
2 PLACES	± 0.20	± ---
1 PLACE	± ---	± ---

ANGULAR ± 3 °

DRAFT WHERE APPLICABLE MUST REMAIN WITHIN DIMENSIONS

DIMENSION STYLE: MM ONLY
SCALE: NTS
DESIGN UNITS: METRIC
THIRD ANGLE PROJECTION

DRAWN BY: KCHO DATE: 2004/11/05
CHECKED BY: PTLIM DATE: 2004/12/08
APPROVED BY: SCLOW DATE: 2004/12/10

TITLE: 2.54MM PITCH DUAL ROW HEADER SINGLE WAFER, T/H

molex MOLEX INCORPORATED

MATERIAL NO.: SEE TABLE
DOCUMENT NO.: SD-87914-013
SHEET NO.: 12 OF 46
SIZE: A3

THIS DRAWING CONTAINS INFORMATION THAT IS PROPRIETARY TO MOLEX INCORPORATED AND SHOULD NOT BE USED WITHOUT WRITTEN PERMISSION

PART NO FOR TRAY PACKAGING	PART NO. FOR TUBE WITHOUT CAP PACKAGING	PART NO. FOR TUBE WITH CAP PACKAGING	PART NO. FOR TAPE & REEL WITHOUT CAP PACKAGING	PART NO. FOR TAPE & REEL WITH CAP PACKAGING	CKT SIZE	VOID POSITION	PLATING TYPE	DIMENSION				
								A	B	F	M	P
87914-1441	-------	-------	-------	-------	14	-----	1	17.78	15.24	13.42	8.08	3.05
87914-1442	-------	-------	-------	-------	14	-----	2	17.78	15.24	13.42	8.08	3.05
87914-1443	-------	-------	-------	-------	14	-----	3	17.78	15.24	13.42	8.08	3.05
87914-1444	-------	-------	-------	-------	14	-----	4	17.78	15.24	13.42	8.08	3.05
87914-1445	-------	-------	-------	-------	14	-----	5	17.78	15.24	13.42	8.08	3.05

PG8, +879140108
EC NO: S2010-0695
DRWN:ATSEE 2010/02/11
CH'KD:PTLIM 2004/12/08
APPR:MLONG 2010/06/05
D7

DESCRIPTION
REV

QUALITY SYMBOLS
F/A=0
F/C=0
F/P=0

GENERAL TOLERANCES (UNLESS SPECIFIED)

	mm	INCH
4 PLACES	± ---	± ---
3 PLACES	± ---	± ---
2 PLACES	± 0.20	± ---
1 PLACE	± ---	± ---

ANGULAR ± 3 °

DRAFT WHERE APPLICABLE MUST REMAIN WITHIN DIMENSIONS

DIMENSION STYLE: MM ONLY
SCALE: NTS
DESIGN UNITS: METRIC
THIRD ANGLE PROJECTION

DRAWN BY: KCHO DATE: 2004/11/05
CHECKED BY: PTLIM DATE: 2004/12/08
APPROVED BY: SCLOW DATE: 2004/12/10

TITLE: 2.54MM PITCH DUAL ROW HEADER SINGLE WAFER, T/H

molex MOLEX INCORPORATED

MATERIAL NO.: SEE TABLE
DOCUMENT NO.: SD-87914-013
SHEET NO.: 13 OF 46
SIZE: A3

THIS DRAWING CONTAINS INFORMATION THAT IS PROPRIETARY TO MOLEX INCORPORATED AND SHOULD NOT BE USED WITHOUT WRITTEN PERMISSION

PART NO FOR TRAY PACKAGING	PART NO. FOR TUBE WITHOUT CAP PACKAGING	PART NO. FOR TUBE WITH CAP PACKAGING	PART NO. FOR TAPE & REEL WITHOUT CAP PACKAGING	PART NO. FOR TAPE & REEL WITH CAP PACKAGING	CKT SIZE	VOID POSITION	PLATING TYPE	DIMENSION				
								A	B	F	M	P
87914-1611	-------	-------	-------	-------	16	-----	1	20.32	17.78	10.92	5.84	2.79
87914-1621	-------	-------	-------	-------	16	-----	1	20.32	17.78	12.25	7.00	2.96
87914-1631	-------	-------	-------	-------	16	-----	1	20.32	17.78	13.38	6.09	5.00
87914-1612	-------	-------	-------	-------	16	-----	2	20.32	17.78	10.92	5.84	2.79
87914-1622	-------	-------	-------	-------	16	-----	2	20.32	17.78	12.25	7.00	2.96
87914-1632	-------	-------	-------	-------	16	-----	2	20.32	17.78	13.38	6.09	5.00
87914-1613	-------	-------	-------	-------	16	-----	3	20.32	17.78	10.92	5.84	2.79
87914-1623	-------	-------	-------	-------	16	-----	3	20.32	17.78	12.25	7.00	2.96
87914-1633	-------	-------	-------	-------	16	-----	3	20.32	17.78	13.38	6.09	5.00
87914-1614	-------	-------	-------	-------	16	-----	4	20.32	17.78	10.92	5.84	2.79
87914-1624	-------	-------	-------	-------	16	-----	4	20.32	17.78	12.25	7.00	2.96
87914-1634	-------	-------	-------	-------	16	-----	4	20.32	17.78	13.38	6.09	5.00
87914-1615	-------	-------	-------	-------	16	-----	5	20.32	17.78	10.92	5.84	2.79
87914-1625	-------	-------	-------	-------	16	-----	5	20.32	17.78	12.25	7.00	2.96
87914-1635	-------	-------	-------	-------	16	-----	5	20.32	17.78	13.38	6.09	5.00
87914-1616	-------	-------	-------	-------	16	-----	6	20.32	17.78	10.92	5.84	2.79
87914-1626	-------	-------	-------	-------	16	-----	6	20.32	17.78	12.25	7.00	2.96
87914-1636	-------	-------	-------	-------	16	-----	6	20.32	17.78	13.38	6.09	5.00
87914-1600	-------	-------	-------	-------	16	-----	6	20.32	17.78	9.49	4.50	2.70

PG8, +879140108
EC NO: S2010-0695
DRWN:ATSEE 2010/02/11
CH'KD:PTLIM 2004/12/08
APPR:MLONG 2010/06/05
D7

DESCRIPTION
REV

QUALITY SYMBOLS
F_A=0
F_C=0
F_P=0

GENERAL TOLERANCES (UNLESS SPECIFIED)

	mm	INCH
4 PLACES	± ---	± ---
3 PLACES	± ---	± ---
2 PLACES	± 0.20	± ---
1 PLACE	± ---	± ---

ANGULAR ± 3 °

DRAFT WHERE APPLICABLE MUST REMAIN WITHIN DIMENSIONS

DIMENSION STYLE: MM ONLY
SCALE: NTS
DESIGN UNITS: METRIC
THIRD ANGLE PROJECTION

DRAWN BY: KCHO DATE: 2004/11/05
CHECKED BY: PTLIM DATE: 2004/12/08
APPROVED BY: SCLOW DATE: 2004/12/10

TITLE: 2.54MM PITCH DUAL ROW HEADER SINGLE WAFER, T/H

molex MOLEX INCORPORATED

MATERIAL NO.: SEE TABLE
DOCUMENT NO.: SD-87914-013
SHEET NO.: 14 OF 46
SIZE: A3

THIS DRAWING CONTAINS INFORMATION THAT IS PROPRIETARY TO MOLEX INCORPORATED AND SHOULD NOT BE USED WITHOUT WRITTEN PERMISSION

PART NO FOR TRAY PACKAGING	PART NO. FOR TUBE WITHOUT CAP PACKAGING	PART NO. FOR TUBE WITH CAP PACKAGING	PART NO. FOR TAPE & REEL WITHOUT CAP PACKAGING	PART NO. FOR TAPE & REEL WITH CAP PACKAGING	CKT SIZE	VOID POSITION	PLATING TYPE	DIMENSION				
								A	B	F	M	P
87914-1811	-------	-------	-------	-------	18	-----	1	22.86	20.32	10.92	5.84	2.79
87914-1821	-------	-------	-------	-------	18	-----	1	22.86	20.32	12.25	7.00	2.96
87914-1831	-------	-------	-------	-------	18	-----	1	22.86	20.32	13.38	6.09	5.00
87914-1812	-------	-------	-------	-------	18	-----	2	22.86	20.32	10.92	5.84	2.79
87914-1822	-------	-------	-------	-------	18	-----	2	22.86	20.32	12.25	7.00	2.96
87914-1832	-------	-------	-------	-------	18	-----	2	22.86	20.32	13.38	6.09	5.00
87914-1813	-------	-------	-------	-------	18	-----	3	22.86	20.32	10.92	5.84	2.79
87914-1823	-------	-------	-------	-------	18	-----	3	22.86	20.32	12.25	7.00	2.96
87914-1833	-------	-------	-------	-------	18	-----	3	22.86	20.32	13.38	6.09	5.00
87914-1814	-------	-------	-------	-------	18	-----	4	22.86	20.32	10.92	5.84	2.79
87914-1824	-------	-------	-------	-------	18	-----	4	22.86	20.32	12.25	7.00	2.96
87914-1834	-------	-------	-------	-------	18	-----	4	22.86	20.32	13.38	6.09	5.00
87914-1815	-------	-------	-------	-------	18	-----	5	22.86	20.32	10.92	5.84	2.79
87914-1825	-------	-------	-------	-------	18	-----	5	22.86	20.32	12.25	7.00	2.96
87914-1835	-------	-------	-------	-------	18	-----	5	22.86	20.32	13.38	6.09	5.00
87914-1816	-------	-------	-------	-------	18	-----	6	22.86	20.32	10.92	5.84	2.79
87914-1826	-------	-------	-------	-------	18	-----	6	22.86	20.32	12.25	7.00	2.96
87914-1836	-------	-------	-------	-------	18	-----	6	22.86	20.32	13.38	6.09	5.00

PG8, +879140108
EC NO: S2010-0695
DRWN:ATSEE 2010/02/11
CH'KD:PTLIM 2004/12/08
APPR:MLONG 2010/06/05
D7
DESCRIPTION
REV

QUALITY SYMBOLS
F/A=0
F/C=0
F/P=0

GENERAL TOLERANCES (UNLESS SPECIFIED)

	mm	INCH
4 PLACES	± ---	± ---
3 PLACES	± ---	± ---
2 PLACES	± 0.20	± ---
1 PLACE	± ---	± ---
ANGULAR ± 3 °		

DRAFT WHERE APPLICABLE MUST REMAIN WITHIN DIMENSIONS

DIMENSION STYLE: MM ONLY
SCALE: NTS
DESIGN UNITS: METRIC
THIRD ANGLE PROJECTION

DRAWN BY: KCHO DATE: 2004/11/05
CHECKED BY: PTLIM DATE: 2004/12/08
APPROVED BY: SCLOW DATE: 2004/12/10

TITLE: 2.54MM PITCH DUAL ROW HEADER SINGLE WAFER, T/H

molex MOLEX INCORPORATED

MATERIAL NO.: SEE TABLE
DOCUMENT NO.: SD-87914-013
SHEET NO.: 15 OF 46
SIZE: A3

THIS DRAWING CONTAINS INFORMATION THAT IS PROPRIETARY TO MOLEX INCORPORATED AND SHOULD NOT BE USED WITHOUT WRITTEN PERMISSION

PART NO FOR TRAY PACKAGING	PART NO. FOR TUBE WITHOUT CAP PACKAGING	PART NO. FOR TUBE WITH CAP PACKAGING	PART NO. FOR TAPE & REEL WITHOUT CAP PACKAGING	PART NO. FOR TAPE & REEL WITH CAP PACKAGING	CKT SIZE	VOID POSITION	PLATING TYPE	DIMENSION				
								A	B	F	M	P
87914-2011	-------	-------	-------	-------	20	-----	1	25.40	22.86	10.92	5.84	2.79
87914-2021	-------	-------	-------	-------	20	-----	1	25.40	22.86	12.25	7.00	2.96
87914-2031	-------	-------	-------	-------	20	-----	1	25.40	22.86	13.38	6.09	5.00
87914-2012	-------	-------	-------	-------	20	-----	2	25.40	22.86	10.92	5.84	2.79
87914-2022	-------	-------	-------	-------	20	-----	2	25.40	22.86	12.25	7.00	2.96
87914-2032	-------	-------	-------	-------	20	-----	2	25.40	22.86	13.38	6.09	5.00
87914-2013	-------	-------	-------	-------	20	-----	3	25.40	22.86	10.92	5.84	2.79
87914-2023	-------	-------	-------	-------	20	-----	3	25.40	22.86	12.25	7.00	2.96
87914-2033	-------	-------	-------	-------	20	-----	3	25.40	22.86	13.38	6.09	5.00
87914-2014	-------	-------	-------	-------	20	-----	4	25.40	22.86	10.92	5.84	2.79
87914-2024	-------	-------	-------	-------	20	-----	4	25.40	22.86	12.25	7.00	2.96
87914-2034	-------	-------	-------	-------	20	-----	4	25.40	22.86	13.38	6.09	5.00
87914-2015	-------	-------	-------	-------	20	-----	5	25.40	22.86	10.92	5.84	2.79
87914-2025	-------	-------	-------	-------	20	-----	5	25.40	22.86	12.25	7.00	2.96
87914-2035	-------	-------	-------	-------	20	-----	5	25.40	22.86	13.38	6.09	5.00
87914-2016	-------	-------	-------	-------	20	-----	6	25.40	22.86	10.92	5.84	2.79
87914-2026	-------	-------	-------	-------	20	-----	6	25.40	22.86	12.25	7.00	2.96
87914-2036	-------	-------	-------	-------	20	-----	6	25.40	22.86	13.38	6.09	5.00

PG8, +879140108
EC NO: S2010-0695
DRWN:ATSEE 2010/02/11
CH'KD:PTLIM 2004/12/08
APPR:MLONG 2010/06/05
D7

REV | DESCRIPTION

QUALITY SYMBOLS
F/A=0
F/C=0
F/P=0

GENERAL TOLERANCES (UNLESS SPECIFIED)

	mm	INCH
4 PLACES	± ---	± ---
3 PLACES	± ---	± ---
2 PLACES	± 0.20	± ---
1 PLACE	± ---	± ---
ANGULAR ± 3 °		

DRAFT WHERE APPLICABLE MUST REMAIN WITHIN DIMENSIONS

DIMENSION STYLE: MM ONLY
SCALE: NTS
DESIGN UNITS: METRIC
THIRD ANGLE PROJECTION

DRAWN BY: KCHO DATE: 2004/11/05
CHECKED BY: PTLIM DATE: 2004/12/08
APPROVED BY: SCLOW DATE: 2004/12/10

TITLE: 2.54MM PITCH DUAL ROW HEADER SINGLE WAFER, T/H

molex MOLEX INCORPORATED

MATERIAL NO.: SEE TABLE
DOCUMENT NO.: SD-87914-013
SHEET NO.: 16 OF 46
SIZE: A3

THIS DRAWING CONTAINS INFORMATION THAT IS PROPRIETARY TO MOLEX INCORPORATED AND SHOULD NOT BE USED WITHOUT WRITTEN PERMISSION

PART NO FOR TRAY PACKAGING	PART NO. FOR TUBE WITHOUT CAP PACKAGING	PART NO. FOR TUBE WITH CAP PACKAGING	PART NO. FOR TAPE & REEL WITHOUT CAP PACKAGING	PART NO. FOR TAPE & REEL WITH CAP PACKAGING	CKT SIZE	VOID POSITION	PLATING TYPE	DIMENSION				
								A	B	F	M	P
87914-2211	-------	-------	-------	-------	22	-----	1	27.94	25.40	10.92	5.84	2.79
87914-2221	-------	-------	-------	-------	22	-----	1	27.94	25.40	12.25	7.00	2.96
87914-2231	-------	-------	-------	-------	22	-----	1	27.94	25.40	13.38	6.09	5.00
87914-2212	-------	-------	-------	-------	22	-----	2	27.94	25.40	10.92	5.84	2.79
87914-2222	-------	-------	-------	-------	22	-----	2	27.94	25.40	12.25	7.00	2.96
87914-2232	-------	-------	-------	-------	22	-----	2	27.94	25.40	13.38	6.09	5.00
87914-2213	-------	-------	-------	-------	22	-----	3	27.94	25.40	10.92	5.84	2.79
87914-2223	-------	-------	-------	-------	22	-----	3	27.94	25.40	12.25	7.00	2.96
87914-2233	-------	-------	-------	-------	22	-----	3	27.94	25.40	13.38	6.09	5.00
87914-2214	-------	-------	-------	-------	22	-----	4	27.94	25.40	10.92	5.84	2.79
87914-2224	-------	-------	-------	-------	22	-----	4	27.94	25.40	12.25	7.00	2.96
87914-2234	-------	-------	-------	-------	22	-----	4	27.94	25.40	13.38	6.09	5.00
87914-2215	-------	-------	-------	-------	22	-----	5	27.94	25.40	10.92	5.84	2.79
87914-2225	-------	-------	-------	-------	22	-----	5	27.94	25.40	12.25	7.00	2.96
87914-2235	-------	-------	-------	-------	22	-----	5	27.94	25.40	13.38	6.09	5.00
87914-2216	-------	-------	-------	-------	22	-----	6	27.94	25.40	10.92	5.84	2.79
87914-2226	-------	-------	-------	-------	22	-----	6	27.94	25.40	12.25	7.00	2.96
87914-2236	-------	-------	-------	-------	22	-----	6	27.94	25.40	13.38	6.09	5.00

PG8, +879140108
EC NO: S2010-0695
DRWN:ATSEE 2010/02/11
CH'KD:PTLIM 2004/12/08
APPR:MLONG 2010/06/05
D7
REV DESCRIPTION

QUALITY SYMBOLS
F/A=0
F/C=0
F/P=0

GENERAL TOLERANCES (UNLESS SPECIFIED)

	mm	INCH
4 PLACES	± ---	± ---
3 PLACES	± ---	± ---
2 PLACES	± 0.20	± ---
1 PLACE	± ---	± ---

ANGULAR ± 3 °

DRAFT WHERE APPLICABLE MUST REMAIN WITHIN DIMENSIONS

DIMENSION STYLE: MM ONLY
SCALE: NTS
DESIGN UNITS: METRIC
THIRD ANGLE PROJECTION

DRAWN BY: KCHO DATE: 2004/11/05
CHECKED BY: PTLIM DATE: 2004/12/08
APPROVED BY: SCLOW DATE: 2004/12/10

TITLE: 2.54MM PITCH DUAL ROW HEADER SINGLE WAFER, T/H

molex MOLEX INCORPORATED

MATERIAL NO.: SEE TABLE
DOCUMENT NO.: SD-87914-013
SHEET NO.: 17 OF 46
SIZE: A3

THIS DRAWING CONTAINS INFORMATION THAT IS PROPRIETARY TO MOLEX INCORPORATED AND SHOULD NOT BE USED WITHOUT WRITTEN PERMISSION

PART NO FOR TRAY PACKAGING	PART NO. FOR TUBE WITHOUT CAP PACKAGING	PART NO. FOR TUBE WITH CAP PACKAGING	PART NO. FOR TAPE & REEL WITHOUT CAP PACKAGING	PART NO. FOR TAPE & REEL WITH CAP PACKAGING	CKT SIZE	VOID POSITION	PLATING TYPE	DIMENSION				
								A	B	F	M	P
87914-2411	-------	-------	-------	-------	24	-----	1	30.48	27.94	10.92	5.84	2.79
87914-2421	-------	-------	-------	-------	24	-----	1	30.48	27.94	12.25	7.00	2.96
87914-2431	-------	-------	-------	-------	24	-----	1	30.48	27.94	13.38	6.09	5.00
87914-2412	-------	-------	-------	-------	24	-----	2	30.48	27.94	10.92	5.84	2.79
87914-2422	-------	-------	-------	-------	24	-----	2	30.48	27.94	12.25	7.00	2.96
87914-2432	-------	-------	-------	-------	24	-----	2	30.48	27.94	13.38	6.09	5.00
87914-2413	-------	-------	-------	-------	24	-----	3	30.48	27.94	10.92	5.84	2.79
87914-2423	-------	-------	-------	-------	24	-----	3	30.48	27.94	12.25	7.00	2.96
87914-2433	-------	-------	-------	-------	24	-----	3	30.48	27.94	13.38	6.09	5.00
87914-2414	-------	-------	-------	-------	24	-----	4	30.48	27.94	10.92	5.84	2.79
87914-2424	-------	-------	-------	-------	24	-----	4	30.48	27.94	12.25	7.00	2.96
87914-2434	-------	-------	-------	-------	24	-----	4	30.48	27.94	13.38	6.09	5.00
87914-2415	-------	-------	-------	-------	24	-----	5	30.48	27.94	10.92	5.84	2.79
87914-2425	-------	-------	-------	-------	24	-----	5	30.48	27.94	12.25	7.00	2.96
87914-2435	-------	-------	-------	-------	24	-----	5	30.48	27.94	13.38	6.09	5.00
87914-2416	-------	-------	-------	-------	24	-----	6	30.48	27.94	10.92	5.84	2.79
87914-2426	-------	-------	-------	-------	24	-----	6	30.48	27.94	12.25	7.00	2.96
87914-2436	-------	-------	-------	-------	24	-----	6	30.48	27.94	13.38	6.09	5.00

PG8, +879140108
EC NO: S2010-0695
DRWN:ATSEE 2010/02/11
CH'KD:PTLIM 2004/12/08
APPR:MLONG 2010/06/05
D7

REV | DESCRIPTION

QUALITY SYMBOLS
F/A=0
F/C=0
F/P=0

GENERAL TOLERANCES (UNLESS SPECIFIED)

	mm	INCH
4 PLACES	± ---	± ---
3 PLACES	± ---	± ---
2 PLACES	± 0.20	± ---
1 PLACE	± ---	± ---

ANGULAR ± 3 °

DRAFT WHERE APPLICABLE MUST REMAIN WITHIN DIMENSIONS

DIMENSION STYLE: MM ONLY
SCALE: NTS
DESIGN UNITS: METRIC
THIRD ANGLE PROJECTION

DRAWN BY: KCHO DATE: 2004/11/05
CHECKED BY: PTLIM DATE: 2004/12/08
APPROVED BY: SCLOW DATE: 2004/12/10

TITLE: 2.54MM PITCH DUAL ROW HEADER SINGLE WAFER, T/H

molex MOLEX INCORPORATED

MATERIAL NO.: SEE TABLE
DOCUMENT NO.: SD-87914-013
SHEET NO.: 18 OF 46
SIZE: A3

THIS DRAWING CONTAINS INFORMATION THAT IS PROPRIETARY TO MOLEX INCORPORATED AND SHOULD NOT BE USED WITHOUT WRITTEN PERMISSION

PART NO FOR TRAY PACKAGING	PART NO. FOR TUBE WITHOUT CAP PACKAGING	PART NO. FOR TUBE WITH CAP PACKAGING	PART NO. FOR TAPE & REEL WITHOUT CAP PACKAGING	PART NO. FOR TAPE & REEL WITH CAP PACKAGING	CKT SIZE	VOID POSITION	PLATING TYPE	DIMENSION				
								A	B	F	M	P
87914-2611	-------	-------	-------	-------	26	-----	1	33.02	30.48	10.92	5.84	2.79
87914-2621	-------	-------	-------	-------	26	-----	1	33.02	30.48	12.25	7.00	2.96
87914-2631	-------	-------	-------	-------	26	-----	1	33.02	30.48	13.38	6.09	5.00
87914-2612	-------	-------	-------	-------	26	-----	2	33.02	30.48	10.92	5.84	2.79
87914-2622	-------	-------	-------	-------	26	-----	2	33.02	30.48	12.25	7.00	2.96
87914-2632	-------	-------	-------	-------	26	-----	2	33.02	30.48	13.38	6.09	5.00
87914-2613	-------	-------	-------	-------	26	-----	3	33.02	30.48	10.92	5.84	2.79
87914-2623	-------	-------	-------	-------	26	-----	3	33.02	30.48	12.25	7.00	2.96
87914-2633	-------	-------	-------	-------	26	-----	3	33.02	30.48	13.38	6.09	5.00
87914-2614	-------	-------	-------	-------	26	-----	4	33.02	30.48	10.92	5.84	2.79
87914-2624	-------	-------	-------	-------	26	-----	4	33.02	30.48	12.25	7.00	2.96
87914-2634	-------	-------	-------	-------	26	-----	4	33.02	30.48	13.38	6.09	5.00
87914-2615	-------	-------	-------	-------	26	-----	5	33.02	30.48	10.92	5.84	2.79
87914-2625	-------	-------	-------	-------	26	-----	5	33.02	30.48	12.25	7.00	2.96
87914-2635	-------	-------	-------	-------	26	-----	5	33.02	30.48	13.38	6.09	5.00
87914-2616	-------	-------	-------	-------	26	-----	6	33.02	30.48	10.92	5.84	2.79
87914-2626	-------	-------	-------	-------	26	-----	6	33.02	30.48	12.25	7.00	2.96
87914-2636	-------	-------	-------	-------	26	-----	6	33.02	30.48	13.38	6.09	5.00

PG8, +879140108
EC NO: S2010-0695
DRWN:ATSEE 2010/02/11
CH'KD:PTLIM 2004/12/08
APPR:MLONG 2010/06/05
D7
REV DESCRIPTION

QUALITY SYMBOLS
FA=0
FC=0
FP=0

GENERAL TOLERANCES (UNLESS SPECIFIED)

	mm	INCH
4 PLACES	± ---	± ---
3 PLACES	± ---	± ---
2 PLACES	± 0.20	± ---
1 PLACE	± ---	± ---

ANGULAR ± 3 °

DRAFT WHERE APPLICABLE MUST REMAIN WITHIN DIMENSIONS

DIMENSION STYLE: MM ONLY
SCALE: NTS
DESIGN UNITS: METRIC
THIRD ANGLE PROJECTION

DRAWN BY: KCHO DATE: 2004/11/05
CHECKED BY: PTLIM DATE: 2004/12/08
APPROVED BY: SCLOW DATE: 2004/12/10

TITLE: 2.54MM PITCH DUAL ROW HEADER SINGLE WAFER, T/H

molex MOLEX INCORPORATED

MATERIAL NO.: SEE TABLE
DOCUMENT NO.: SD-87914-013
SHEET NO.: 19 OF 46
SIZE: A3

THIS DRAWING CONTAINS INFORMATION THAT IS PROPRIETARY TO MOLEX INCORPORATED AND SHOULD NOT BE USED WITHOUT WRITTEN PERMISSION

PART NO FOR TRAY PACKAGING	PART NO. FOR TUBE WITHOUT CAP PACKAGING	PART NO. FOR TUBE WITH CAP PACKAGING	PART NO. FOR TAPE & REEL WITHOUT CAP PACKAGING	PART NO. FOR TAPE & REEL WITH CAP PACKAGING	CKT SIZE	VOID POSITION	PLATING TYPE	DIMENSION				
								A	B	F	M	P
87914-2811	-------	-------	-------	-------	28	-----	1	35.56	33.02	10.92	5.84	2.79
87914-2821	-------	-------	-------	-------	28	-----	1	35.56	33.02	12.25	7.00	2.96
87914-2831	-------	-------	-------	-------	28	-----	1	35.56	33.02	13.38	6.09	5.00
87914-2812	-------	-------	-------	-------	28	-----	2	35.56	33.02	10.92	5.84	2.79
87914-2822	-------	-------	-------	-------	28	-----	2	35.56	33.02	12.25	7.00	2.96
87914-2832	-------	-------	-------	-------	28	-----	2	35.56	33.02	13.38	6.09	5.00
87914-2813	-------	-------	-------	-------	28	-----	3	35.56	33.02	10.92	5.84	2.79
87914-2823	-------	-------	-------	-------	28	-----	3	35.56	33.02	12.25	7.00	2.96
87914-2833	-------	-------	-------	-------	28	-----	3	35.56	33.02	13.38	6.09	5.00
87914-2814	-------	-------	-------	-------	28	-----	4	35.56	33.02	10.92	5.84	2.79
87914-2824	-------	-------	-------	-------	28	-----	4	35.56	33.02	12.25	7.00	2.96
87914-2834	-------	-------	-------	-------	28	-----	4	35.56	33.02	13.38	6.09	5.00
87914-2815	-------	-------	-------	-------	28	-----	5	35.56	33.02	10.92	5.84	2.79
87914-2825	-------	-------	-------	-------	28	-----	5	35.56	33.02	12.25	7.00	2.96
87914-2835	-------	-------	-------	-------	28	-----	5	35.56	33.02	13.38	6.09	5.00
87914-2816	-------	-------	-------	-------	28	-----	6	35.56	33.02	10.92	5.84	2.79
87914-2826	-------	-------	-------	-------	28	-----	6	35.56	33.02	12.25	7.00	2.96
87914-2836	-------	-------	-------	-------	28	-----	6	35.56	33.02	13.38	6.09	5.00

PG8, +879140108
EC NO: S2010-0695
DRWN:ATSEE 2010/02/11
CH'KD:PTLIM 2004/12/08
APPR:MLONG 2010/06/05
D7
REV DESCRIPTION

QUALITY SYMBOLS
F_A=0
F_C=0
F_P=0

GENERAL TOLERANCES (UNLESS SPECIFIED)

	mm	INCH
4 PLACES	± ---	± ---
3 PLACES	± ---	± ---
2 PLACES	± 0.20	± ---
1 PLACE	± ---	± ---

ANGULAR ± 3 °

DRAFT WHERE APPLICABLE MUST REMAIN WITHIN DIMENSIONS

DIMENSION STYLE: MM ONLY
SCALE: NTS
DESIGN UNITS: METRIC
THIRD ANGLE PROJECTION

DRAWN BY: KCHO DATE: 2004/11/05
CHECKED BY: PTLIM DATE: 2004/12/08
APPROVED BY: SCLOW DATE: 2004/12/10

TITLE: 2.54MM PITCH DUAL ROW HEADER SINGLE WAFER, T/H

molex MOLEX INCORPORATED

MATERIAL NO.: SEE TABLE
DOCUMENT NO.: SD-87914-013
SHEET NO.: 20 OF 46
SIZE: A3

THIS DRAWING CONTAINS INFORMATION THAT IS PROPRIETARY TO MOLEX INCORPORATED AND SHOULD NOT BE USED WITHOUT WRITTEN PERMISSION

PART NO FOR TRAY PACKAGING	PART NO. FOR TUBE WITHOUT CAP PACKAGING	PART NO. FOR TUBE WITH CAP PACKAGING	PART NO. FOR TAPE & REEL WITHOUT CAP PACKAGING	PART NO. FOR TAPE & REEL WITH CAP PACKAGING	CKT SIZE	VOID POSITION	PLATING TYPE	DIMENSION				
								A	B	F	M	P
87914-3011	-------	-------	-------	-------	30	-----	1	38.10	35.56	10.92	5.84	2.79
87914-3021	-------	-------	-------	-------	30	-----	1	38.10	35.56	12.25	7.00	2.96
87914-3031	-------	-------	-------	-------	30	-----	1	38.10	35.56	13.38	6.09	5.00
87914-3012	-------	-------	-------	-------	30	-----	2	38.10	35.56	10.92	5.84	2.79
87914-3022	-------	-------	-------	-------	30	-----	2	38.10	35.56	12.25	7.00	2.96
87914-3032	-------	-------	-------	-------	30	-----	2	38.10	35.56	13.38	6.09	5.00
87914-3013	-------	-------	-------	-------	30	-----	3	38.10	35.56	10.92	5.84	2.79
87914-3023	-------	-------	-------	-------	30	-----	3	38.10	35.56	12.25	7.00	2.96
87914-3033	-------	-------	-------	-------	30	-----	3	38.10	35.56	13.38	6.09	5.00
87914-3014	-------	-------	-------	-------	30	-----	4	38.10	35.56	10.92	5.84	2.79
87914-3024	-------	-------	-------	-------	30	-----	4	38.10	35.56	12.25	7.00	2.96
87914-3034	-------	-------	-------	-------	30	-----	4	38.10	35.56	13.38	6.09	5.00
87914-3015	-------	-------	-------	-------	30	-----	5	38.10	35.56	10.92	5.84	2.79
87914-3025	-------	-------	-------	-------	30	-----	5	38.10	35.56	12.25	7.00	2.96
87914-3035	-------	-------	-------	-------	30	-----	5	38.10	35.56	13.38	6.09	5.00
87914-3016	-------	-------	-------	-------	30	-----	6	38.10	35.56	10.92	5.84	2.79
87914-3026	-------	-------	-------	-------	30	-----	6	38.10	35.56	12.25	7.00	2.96
87914-3036	-------	-------	-------	-------	30	-----	6	38.10	35.56	13.38	6.09	5.00

PG8, +879140108
EC NO: S2010-0695
DRWN:ATSEE 2010/02/11
CH'KD:PTLIM 2004/12/08
APPR:MLONG 2010/06/05
D7

DESCRIPTION
REV

QUALITY SYMBOLS
F_A=0
F_C=0
F_P=0

GENERAL TOLERANCES (UNLESS SPECIFIED)

	mm	INCH
4 PLACES	± ---	± ---
3 PLACES	± ---	± ---
2 PLACES	± 0.20	± ---
1 PLACE	± ---	± ---

ANGULAR ± 3 °

DRAFT WHERE APPLICABLE MUST REMAIN WITHIN DIMENSIONS

DIMENSION STYLE: MM ONLY
SCALE: NTS
DESIGN UNITS: METRIC
THIRD ANGLE PROJECTION

DRAWN BY: KCHO DATE: 2004/11/05
CHECKED BY: PTLIM DATE: 2004/12/08
APPROVED BY: SCLOW DATE: 2004/12/10

TITLE: 2.54MM PITCH DUAL ROW HEADER SINGLE WAFER, T/H

molex MOLEX INCORPORATED

MATERIAL NO.: SEE TABLE
DOCUMENT NO.: SD-87914-013
SHEET NO.: 21 OF 46
SIZE: A3

THIS DRAWING CONTAINS INFORMATION THAT IS PROPRIETARY TO MOLEX INCORPORATED AND SHOULD NOT BE USED WITHOUT WRITTEN PERMISSION

PART NO FOR TRAY PACKAGING	PART NO. FOR TUBE WITHOUT CAP PACKAGING	PART NO. FOR TUBE WITH CAP PACKAGING	PART NO. FOR TAPE & REEL WITHOUT CAP PACKAGING	PART NO. FOR TAPE & REEL WITH CAP PACKAGING	CKT SIZE	VOID POSITION	PLATING TYPE	DIMENSION				
								A	B	F	M	P
87914-3211	-------	-------	-------	-------	32	-----	1	40.64	38.10	10.92	5.84	2.79
87914-3221	-------	-------	-------	-------	32	-----	1	40.64	38.10	12.25	7.00	2.96
87914-3231	-------	-------	-------	-------	32	-----	1	40.64	38.10	13.38	6.09	5.00
87914-3212	-------	-------	-------	-------	32	-----	2	40.64	38.10	10.92	5.84	2.79
87914-3222	-------	-------	-------	-------	32	-----	2	40.64	38.10	12.25	7.00	2.96
87914-3232	-------	-------	-------	-------	32	-----	2	40.64	38.10	13.38	6.09	5.00
87914-3213	-------	-------	-------	-------	32	-----	3	40.64	38.10	10.92	5.84	2.79
87914-3223	-------	-------	-------	-------	32	-----	3	40.64	38.10	12.25	7.00	2.96
87914-3233	-------	-------	-------	-------	32	-----	3	40.64	38.10	13.38	6.09	5.00
87914-3214	-------	-------	-------	-------	32	-----	4	40.64	38.10	10.92	5.84	2.79
87914-3224	-------	-------	-------	-------	32	-----	4	40.64	38.10	12.25	7.00	2.96
87914-3234	-------	-------	-------	-------	32	-----	4	40.64	38.10	13.38	6.09	5.00
87914-3215	-------	-------	-------	-------	32	-----	5	40.64	38.10	10.92	5.84	2.79
87914-3225	-------	-------	-------	-------	32	-----	5	40.64	38.10	12.25	7.00	2.96
87914-3235	-------	-------	-------	-------	32	-----	5	40.64	38.10	13.38	6.09	5.00
87914-3216	-------	-------	-------	-------	32	-----	6	40.64	38.10	10.92	5.84	2.79
87914-3226	-------	-------	-------	-------	32	-----	6	40.64	38.10	12.25	7.00	2.96
87914-3236	-------	-------	-------	-------	32	-----	6	40.64	38.10	13.38	6.09	5.00

PG8, +879140108
EC NO: S2010-0695
DRWN:ATSEE 2010/02/11
CH'KD:PTLIM 2004/12/08
APPR:MLONG 2010/06/05
D7
DESCRIPTION
REV

QUALITY SYMBOLS
F/A=0
F/C=0
F/P=0

GENERAL TOLERANCES (UNLESS SPECIFIED)

	mm	INCH
4 PLACES	± ---	± ---
3 PLACES	± ---	± ---
2 PLACES	± 0.20	± ---
1 PLACE	± ---	± ---

ANGULAR ± 3 °

DRAFT WHERE APPLICABLE MUST REMAIN WITHIN DIMENSIONS

DIMENSION STYLE: MM ONLY
SCALE: NTS
DESIGN UNITS: METRIC
THIRD ANGLE PROJECTION

DRAWN BY: KCHO DATE: 2004/11/05
CHECKED BY: PTLIM DATE: 2004/12/08
APPROVED BY: SCLOW DATE: 2004/12/10

TITLE: 2.54MM PITCH DUAL ROW HEADER SINGLE WAFER, T/H

molex MOLEX INCORPORATED

MATERIAL NO.: SEE TABLE
DOCUMENT NO.: SD-87914-013
SHEET NO.: 22 OF 46
SIZE: A3

THIS DRAWING CONTAINS INFORMATION THAT IS PROPRIETARY TO MOLEX INCORPORATED AND SHOULD NOT BE USED WITHOUT WRITTEN PERMISSION

PART NO FOR TRAY PACKAGING	PART NO. FOR TUBE WITHOUT CAP PACKAGING	PART NO. FOR TUBE WITH CAP PACKAGING	PART NO. FOR TAPE & REEL WITHOUT CAP PACKAGING	PART NO. FOR TAPE & REEL WITH CAP PACKAGING	CKT SIZE	VOID POSITION	PLATING TYPE	DIMENSION				
								A	B	F	M	D
87914-3411	-------	-------	-------	-------	34	-----	1	43.18	40.64	10.92	5.84	2.79
87914-3421	-------	-------	-------	-------	34	-----	1	43.18	40.64	12.25	7.00	2.96
87914-3431	-------	-------	-------	-------	34	-----	1	43.18	40.64	13.38	6.09	5.00
87914-3412	-------	-------	-------	-------	34	-----	2	43.18	40.64	10.92	5.84	2.79
87914-3422	-------	-------	-------	-------	34	-----	2	43.18	40.64	12.25	7.00	2.96
87914-3432	-------	-------	-------	-------	34	-----	2	43.18	40.64	13.38	6.09	5.00
87914-3413	-------	-------	-------	-------	34	-----	3	43.18	40.64	10.92	5.84	2.79
87914-3423	-------	-------	-------	-------	34	-----	3	43.18	40.64	12.25	7.00	2.96
87914-3433	-------	-------	-------	-------	34	-----	3	43.18	40.64	13.38	6.09	5.00
87914-3414	-------	-------	-------	-------	34	-----	4	43.18	40.64	10.92	5.84	2.79
87914-3424	-------	-------	-------	-------	34	-----	4	43.18	40.64	12.25	7.00	2.96
87914-3434	-------	-------	-------	-------	34	-----	4	43.18	40.64	13.38	6.09	5.00
87914-3415	-------	-------	-------	-------	34	-----	5	43.18	40.64	10.92	5.84	2.79
87914-3425	-------	-------	-------	-------	34	-----	5	43.18	40.64	12.25	7.00	2.96
87914-3435	-------	-------	-------	-------	34	-----	5	43.18	40.64	13.38	6.09	5.00
87914-3416	-------	-------	-------	-------	34	-----	6	43.18	40.64	10.92	5.84	2.79
87914-3426	-------	-------	-------	-------	34	-----	6	43.18	40.64	12.25	7.00	2.96
87914-3436	-------	-------	-------	-------	34	-----	6	43.18	40.64	13.38	6.09	5.00

PG8, +879140108
EC NO: S2010-0695
DRWN:ATSEE 2010/02/11
CH'KD:PTLIM 2004/12/08
APPR:MLONG 2010/06/05
D7
REV DESCRIPTION

QUALITY SYMBOLS
F_A=0
F_C=0
F_P=0

GENERAL TOLERANCES (UNLESS SPECIFIED)

	mm	INCH
4 PLACES	± ---	± ---
3 PLACES	± ---	± ---
2 PLACES	± 0.20	± ---
1 PLACE	± ---	± ---

ANGULAR ± 3 °

DRAFT WHERE APPLICABLE MUST REMAIN WITHIN DIMENSIONS

DIMENSION STYLE: MM ONLY
SCALE: NTS
DESIGN UNITS: METRIC
THIRD ANGLE PROJECTION

DRAWN BY: KCHO DATE: 2004/11/05
CHECKED BY: PTLIM DATE: 2004/12/08
APPROVED BY: SCLOW DATE: 2004/12/10

TITLE: 2.54MM PITCH DUAL ROW HEADER SINGLE WAFER, T/H

molex MOLEX INCORPORATED

MATERIAL NO.: SEE TABLE
DOCUMENT NO.: SD-87914-013
SHEET NO.: 23 OF 46
SIZE: A3

THIS DRAWING CONTAINS INFORMATION THAT IS PROPRIETARY TO MOLEX INCORPORATED AND SHOULD NOT BE USED WITHOUT WRITTEN PERMISSION

PART NO FOR TRAY PACKAGING	PART NO. FOR TUBE WITHOUT CAP PACKAGING	PART NO. FOR TUBE WITH CAP PACKAGING	PART NO. FOR TAPE & REEL WITHOUT CAP PACKAGING	PART NO. FOR TAPE & REEL WITH CAP PACKAGING	CKT SIZE	VOID POSITION	PLATING TYPE	DIMENSION				
								A	B	F	M	P
87914-3611	-------	-------	-------	-------	36	-----	1	45.72	43.18	10.92	5.84	2.79
87914-3621	-------	-------	-------	-------	36	-----	1	45.72	43.18	12.25	7.00	2.96
87914-3631	-------	-------	-------	-------	36	-----	1	45.72	43.18	13.38	6.09	5.00
87914-3612	-------	-------	-------	-------	36	-----	2	45.72	43.18	10.92	5.84	2.79
87914-3622	-------	-------	-------	-------	36	-----	2	45.72	43.18	12.25	7.00	2.96
87914-3632	-------	-------	-------	-------	36	-----	2	45.72	43.18	13.38	6.09	5.00
87914-3613	-------	-------	-------	-------	36	-----	3	45.72	43.18	10.92	5.84	2.79
87914-3623	-------	-------	-------	-------	36	-----	3	45.72	43.18	12.25	7.00	2.96
87914-3633	-------	-------	-------	-------	36	-----	3	45.72	43.18	13.38	6.09	5.00
87914-3614	-------	-------	-------	-------	36	-----	4	45.72	43.18	10.92	5.84	2.79
87914-3624	-------	-------	-------	-------	36	-----	4	45.72	43.18	12.25	7.00	2.96
87914-3634	-------	-------	-------	-------	36	-----	4	45.72	43.18	13.38	6.09	5.00
87914-3615	-------	-------	-------	-------	36	-----	5	45.72	43.18	10.92	5.84	2.79
87914-3625	-------	-------	-------	-------	36	-----	5	45.72	43.18	12.25	7.00	2.96
87914-3635	-------	-------	-------	-------	36	-----	5	45.72	43.18	13.38	6.09	5.00
87914-3616	-------	-------	-------	-------	36	-----	6	45.72	43.18	10.92	5.84	2.79
87914-3626	-------	-------	-------	-------	36	-----	6	45.72	43.18	12.25	7.00	2.96
87914-3636	-------	-------	-------	-------	36	-----	6	45.72	43.18	13.38	6.09	5.00
87914-3637	-------	-------	-------	-------	36	-----	6	45.72	43.18	12.10	7.21	2.60

PG8, +879140108
EC NO: S2010-0695
DRWN:ATSEE 2010/02/11
CH'KD:PTLIM 2004/12/08
APPR:MLONG 2010/06/05
D7
DESCRIPTION
REV

QUALITY SYMBOLS
FA=0
FC=0
FP=0

GENERAL TOLERANCES (UNLESS SPECIFIED)

	mm	INCH
4 PLACES	± ---	± ---
3 PLACES	± ---	± ---
2 PLACES	± 0.20	± ---
1 PLACE	± ---	± ---
ANGULAR ± 3 °		

DRAFT WHERE APPLICABLE MUST REMAIN WITHIN DIMENSIONS

DIMENSION STYLE: MM ONLY
SCALE: NTS
DESIGN UNITS: METRIC
THIRD ANGLE PROJECTION

DRAWN BY: KCHO DATE: 2004/11/05
CHECKED BY: PTLIM DATE: 2004/12/08
APPROVED BY: SCLOW DATE: 2004/12/10

TITLE: 2.54MM PITCH DUAL ROW HEADER SINGLE WAFER, T/H

molex MOLEX INCORPORATED

MATERIAL NO.: SEE TABLE
DOCUMENT NO.: SD-87914-013
SHEET NO.: 24 OF 46
SIZE: A3

THIS DRAWING CONTAINS INFORMATION THAT IS PROPRIETARY TO MOLEX INCORPORATED AND SHOULD NOT BE USED WITHOUT WRITTEN PERMISSION

PART NO FOR TRAY PACKAGING	PART NO. FOR TUBE WITHOUT CAP PACKAGING	PART NO. FOR TUBE WITH CAP PACKAGING	PART NO. FOR TAPE & REEL WITHOUT CAP PACKAGING	PART NO. FOR TAPE & REEL WITH CAP PACKAGING	CKT SIZE	VOID POSITION	PLATING TYPE	DIMENSION				
								A	B	F	M	P
87914-3811	-------	-------	-------	-------	38	-----	1	48.26	45.72	10.92	5.84	2.79
87914-3821	-------	-------	-------	-------	38	-----	1	48.26	45.72	12.25	7.00	2.96
87914-3831	-------	-------	-------	-------	38	-----	1	48.26	45.72	13.38	6.09	5.00
87914-3812	-------	-------	-------	-------	38	-----	2	48.26	45.72	10.92	5.84	2.79
87914-3822	-------	-------	-------	-------	38	-----	2	48.26	45.72	12.25	7.00	2.96
87914-3832	-------	-------	-------	-------	38	-----	2	48.26	45.72	13.38	6.09	5.00
87914-3813	-------	-------	-------	-------	38	-----	3	48.26	45.72	10.92	5.84	2.79
87914-3823	-------	-------	-------	-------	38	-----	3	48.26	45.72	12.25	7.00	2.96
87914-3833	-------	-------	-------	-------	38	-----	3	48.26	45.72	13.38	6.09	5.00
87914-3814	-------	-------	-------	-------	38	-----	4	48.26	45.72	10.92	5.84	2.79
87914-3824	-------	-------	-------	-------	38	-----	4	48.26	45.72	12.25	7.00	2.96
87914-3834	-------	-------	-------	-------	38	-----	4	48.26	45.72	13.38	6.09	5.00
87914-3815	-------	-------	-------	-------	38	-----	5	48.26	45.72	10.92	5.84	2.79
87914-3825	-------	-------	-------	-------	38	-----	5	48.26	45.72	12.25	7.00	2.96
87914-3835	-------	-------	-------	-------	38	-----	5	48.26	45.72	13.38	6.09	5.00
87914-3816	-------	-------	-------	-------	38	-----	6	48.26	45.72	10.92	5.84	2.79
87914-3826	-------	-------	-------	-------	38	-----	6	48.26	45.72	12.25	7.00	2.96
87914-3836	-------	-------	-------	-------	38	-----	6	48.26	45.72	13.38	6.09	5.00

PG8, +879140108
EC NO: S2010-0695
DRWN:ATSEE 2010/02/11
CH'KD:PTLIM 2004/12/08
APPR:MLONG 2010/06/05
D7

DESCRIPTION
REV

QUALITY SYMBOLS
F/A=0
F/C=0
F/P=0

GENERAL TOLERANCES (UNLESS SPECIFIED)

	mm	INCH
4 PLACES	± ---	± ---
3 PLACES	± ---	± ---
2 PLACES	± 0.20	± ---
1 PLACE	± ---	± ---

ANGULAR ± 3 °

DRAFT WHERE APPLICABLE MUST REMAIN WITHIN DIMENSIONS

DIMENSION STYLE: MM ONLY
SCALE: NTS
DESIGN UNITS: METRIC
THIRD ANGLE PROJECTION

DRAWN BY: KCHO DATE: 2004/11/05
CHECKED BY: PTLIM DATE: 2004/12/08
APPROVED BY: SCLOW DATE: 2004/12/10

TITLE: 2.54MM PITCH DUAL ROW HEADER SINGLE WAFER, T/H

molex MOLEX INCORPORATED

MATERIAL NO.: SEE TABLE
DOCUMENT NO.: SD-87914-013
SHEET NO.: 25 OF 46
SIZE: A3

THIS DRAWING CONTAINS INFORMATION THAT IS PROPRIETARY TO MOLEX INCORPORATED AND SHOULD NOT BE USED WITHOUT WRITTEN PERMISSION

PART NO FOR TRAY PACKAGING	PART NO. FOR TUBE WITHOUT CAP PACKAGING	PART NO. FOR TUBE WITH CAP PACKAGING	PART NO. FOR TAPE & REEL WITHOUT CAP PACKAGING	PART NO. FOR TAPE & REEL WITH CAP PACKAGING	CKT SIZE	VOID POSITION	PLATING TYPE	DIMENSION				
								A	B	F	M	P
87914-4011	-------	-------	-------	-------	40	-----	1	50.80	48.26	10.92	5.84	2.79
87914-4021	-------	-------	-------	-------	40	-----	1	50.80	48.26	12.25	7.00	2.96
87914-4031	-------	-------	-------	-------	40	-----	1	50.80	48.26	13.38	6.09	5.00
87914-4012	-------	-------	-------	-------	40	-----	2	50.80	48.26	10.92	5.84	2.79
87914-4022	-------	-------	-------	-------	40	-----	2	50.80	48.26	12.25	7.00	2.96
87914-4032	-------	-------	-------	-------	40	-----	2	50.80	48.26	13.38	6.09	5.00
87914-4013	-------	-------	-------	-------	40	-----	3	50.80	48.26	10.92	5.84	2.79
87914-4023	-------	-------	-------	-------	40	-----	3	50.80	48.26	12.25	7.00	2.96
87914-4033	-------	-------	-------	-------	40	-----	3	50.80	48.26	13.38	6.09	5.00
87914-4014	-------	-------	-------	-------	40	-----	4	50.80	48.26	10.92	5.84	2.79
87914-4024	-------	-------	-------	-------	40	-----	4	50.80	48.26	12.25	7.00	2.96
87914-4034	-------	-------	-------	-------	40	-----	4	50.80	48.26	13.38	6.09	5.00
87914-4015	-------	-------	-------	-------	40	-----	5	50.80	48.26	10.92	5.84	2.79
87914-4025	-------	-------	-------	-------	40	-----	5	50.80	48.26	12.25	7.00	2.96
87914-4035	-------	-------	-------	-------	40	-----	5	50.80	48.26	13.38	6.09	5.00
87914-4016	-------	-------	-------	-------	40	-----	6	50.80	48.26	10.92	5.84	2.79
87914-4026	-------	-------	-------	-------	40	-----	6	50.80	48.26	12.25	7.00	2.96
87914-4036	-------	-------	-------	-------	40	-----	6	50.80	48.26	13.38	6.09	5.00

PG8, +879140108
EC NO: S2010-0695
DRWN:ATSEE 2010/02/11
CH'KD:PTLIM 2004/12/08
APPR:MLONG 2010/06/05
D7
REV DESCRIPTION

QUALITY SYMBOLS
FA=0
FC=0
FP=0

GENERAL TOLERANCES (UNLESS SPECIFIED)

	mm	INCH
4 PLACES	± ---	± ---
3 PLACES	± ---	± ---
2 PLACES	± 0.20	± ---
1 PLACE	± ---	± ---
ANGULAR ± 3 °		

DRAFT WHERE APPLICABLE MUST REMAIN WITHIN DIMENSIONS

DIMENSION STYLE: MM ONLY
SCALE: NTS
DESIGN UNITS: METRIC
THIRD ANGLE PROJECTION

DRAWN BY: KCHO DATE: 2004/11/05
CHECKED BY: PTLIM DATE: 2004/12/08
APPROVED BY: SCLOW DATE: 2004/12/10

TITLE: 2.54MM PITCH DUAL ROW HEADER SINGLE WAFER, T/H

molex MOLEX INCORPORATED

MATERIAL NO.: SEE TABLE
DOCUMENT NO.: SD-87914-013
SHEET NO.: 26 OF 46
SIZE: A3

THIS DRAWING CONTAINS INFORMATION THAT IS PROPRIETARY TO MOLEX INCORPORATED AND SHOULD NOT BE USED WITHOUT WRITTEN PERMISSION

PART NO FOR TRAY PACKAGING	PART NO. FOR TUBE WITHOUT CAP PACKAGING	PART NO. FOR TUBE WITH CAP PACKAGING	PART NO. FOR TAPE & REEL WITHOUT CAP PACKAGING	PART NO. FOR TAPE & REEL WITH CAP PACKAGING	CKT SIZE	VOID POSITION	PLATING TYPE	DIMENSION				
								A	B	F	M	P
87914-4211	-------	-------	-------	-------	42	-----	1	53.34	50.80	10.92	5.84	2.79
87914-4221	-------	-------	-------	-------	42	-----	1	53.34	50.80	12.25	7.00	2.96
87914-4212	-------	-------	-------	-------	42	-----	2	53.34	50.80	10.92	5.84	2.79
87914-4222	-------	-------	-------	-------	42	-----	2	53.34	50.80	12.25	7.00	2.96
87914-4213	-------	-------	-------	-------	42	-----	3	53.34	50.80	10.92	5.84	2.79
87914-4223	-------	-------	-------	-------	42	-----	3	53.34	50.80	12.25	7.00	2.96
87914-4214	-------	-------	-------	-------	42	-----	4	53.34	50.80	10.92	5.84	2.79
87914-4224	-------	-------	-------	-------	42	-----	4	53.34	50.80	12.25	7.00	2.96
87914-4215	-------	-------	-------	-------	42	-----	5	53.34	50.80	10.92	5.84	2.79
87914-4225	-------	-------	-------	-------	42	-----	5	53.34	50.80	12.25	7.00	2.96
87914-4216	-------	-------	-------	-------	42	-----	6	53.34	50.80	10.92	5.84	2.79
87914-4226	-------	-------	-------	-------	42	-----	6	53.34	50.80	12.25	7.00	2.96

PG8, +879140108
EC NO: S2010-0695
DRWN:ATSEE 2010/02/11
CH'KD:PTLIM 2004/12/08
APPR:MLONG 2010/06/05
D7

REV | DESCRIPTION

QUALITY SYMBOLS
FA=0
FC=0
FP=0

GENERAL TOLERANCES (UNLESS SPECIFIED)

	mm	INCH
4 PLACES	± ---	± ---
3 PLACES	± ---	± ---
2 PLACES	± 0.20	± ---
1 PLACE	± ---	± ---

ANGULAR ± 3 °

DRAFT WHERE APPLICABLE MUST REMAIN WITHIN DIMENSIONS

DIMENSION STYLE: MM ONLY
SCALE: NTS
DESIGN UNITS: METRIC
THIRD ANGLE PROJECTION

DRAWN BY: KCHO DATE: 2004/11/05
CHECKED BY: PTLIM DATE: 2004/12/08
APPROVED BY: SCLOW DATE: 2004/12/10

TITLE: 2.54MM PITCH DUAL ROW HEADER SINGLE WAFER, T/H

molex MOLEX INCORPORATED

MATERIAL NO.: SEE TABLE
DOCUMENT NO.: SD-87914-013
SHEET NO.: 27 OF 46
SIZE: A3

THIS DRAWING CONTAINS INFORMATION THAT IS PROPRIETARY TO MOLEX INCORPORATED AND SHOULD NOT BE USED WITHOUT WRITTEN PERMISSION

PART NO FOR TRAY PACKAGING	PART NO. FOR TUBE WITHOUT CAP PACKAGING	PART NO. FOR TUBE WITH CAP PACKAGING	PART NO. FOR TAPE & REEL WITHOUT CAP PACKAGING	PART NO. FOR TAPE & REEL WITH CAP PACKAGING	CKT SIZE	VOID POSITION	PLATING TYPE	DIMENSION				
								A	B	F	M	P
87914-4411	-------	-------	-------	-------	44	-----	1	55.88	53.34	10.92	5.84	2.79
87914-4421	-------	-------	-------	-------	44	-----	1	55.88	53.34	12.25	7.00	2.96
87914-4412	-------	-------	-------	-------	44	-----	2	55.88	53.34	10.92	5.84	2.79
87914-4422	-------	-------	-------	-------	44	-----	2	55.88	53.34	12.25	7.00	2.96
87914-4413	-------	-------	-------	-------	44	-----	3	55.88	53.34	10.92	5.84	2.79
87914-4423	-------	-------	-------	-------	44	-----	3	55.88	53.34	12.25	7.00	2.96
87914-4414	-------	-------	-------	-------	44	-----	4	55.88	53.34	10.92	5.84	2.79
87914-4424	-------	-------	-------	-------	44	-----	4	55.88	53.34	12.25	7.00	2.96
87914-4415	-------	-------	-------	-------	44	-----	5	55.88	53.34	10.92	5.84	2.79
87914-4425	-------	-------	-------	-------	44	-----	5	55.88	53.34	12.25	7.00	2.96
87914-4416	-------	-------	-------	-------	44	-----	6	55.88	53.34	10.92	5.84	2.79
87914-4426	-------	-------	-------	-------	44	-----	6	55.88	53.34	12.25	7.00	2.96

PG8, +879140108
EC NO: S2010-0695
DRWN:ATSEE 2010/02/11
CH'KD:PTLIM 2004/12/08
APPR:MLONG 2010/06/05
D7
REV DESCRIPTION

QUALITY SYMBOLS
F_A=0
F_C=0
F_P=0

GENERAL TOLERANCES (UNLESS SPECIFIED)

	mm	INCH
4 PLACES	± ---	± ---
3 PLACES	± ---	± ---
2 PLACES	± 0.20	± ---
1 PLACE	± ---	± ---

ANGULAR ± 3 °

DRAFT WHERE APPLICABLE MUST REMAIN WITHIN DIMENSIONS

DIMENSION STYLE: MM ONLY
SCALE: NTS
DESIGN UNITS: METRIC
THIRD ANGLE PROJECTION

DRAWN BY: KCHO DATE: 2004/11/05
CHECKED BY: PTLIM DATE: 2004/12/08
APPROVED BY: SCLOW DATE: 2004/12/10

TITLE: 2.54MM PITCH DUAL ROW HEADER SINGLE WAFER, T/H

molex MOLEX INCORPORATED

MATERIAL NO.: SEE TABLE
DOCUMENT NO.: SD-87914-013
SHEET NO.: 28 OF 46
SIZE: A3

THIS DRAWING CONTAINS INFORMATION THAT IS PROPRIETARY TO MOLEX INCORPORATED AND SHOULD NOT BE USED WITHOUT WRITTEN PERMISSION

PART NO FOR TRAY PACKAGING	PART NO. FOR TUBE WITHOUT CAP PACKAGING	PART NO. FOR TUBE WITH CAP PACKAGING	PART NO. FOR TAPE & REEL WITHOUT CAP PACKAGING	PART NO. FOR TAPE & REEL WITH CAP PACKAGING	CKT SIZE	VOID POSITION	PLATING TYPE	DIMENSION				
								A	B	F	M	P
87914-4611	-------	-------	-------	-------	46	-----	1	58.42	55.88	10.92	5.84	2.79
87914-4621	-------	-------	-------	-------	46	-----	1	58.42	55.88	12.25	7.00	2.96
87914-4612	-------	-------	-------	-------	46	-----	2	58.42	55.88	10.92	5.84	2.79
87914-4622	-------	-------	-------	-------	46	-----	2	58.42	55.88	12.25	7.00	2.96
87914-4613	-------	-------	-------	-------	46	-----	3	58.42	55.88	10.92	5.84	2.79
87914-4623	-------	-------	-------	-------	46	-----	3	58.42	55.88	12.25	7.00	2.96
87914-4614	-------	-------	-------	-------	46	-----	4	58.42	55.88	10.92	5.84	2.79
87914-4624	-------	-------	-------	-------	46	-----	4	58.42	55.88	12.25	7.00	2.96
87914-4615	-------	-------	-------	-------	46	-----	5	58.42	55.88	10.92	5.84	2.79
87914-4625	-------	-------	-------	-------	46	-----	5	58.42	55.88	12.25	7.00	2.96
87914-4616	-------	-------	-------	-------	46	-----	6	58.42	55.88	10.92	5.84	2.79
87914-4626	-------	-------	-------	-------	46	-----	6	58.42	55.88	12.25	7.00	2.96

PG8, +879140108
EC NO: S2010-0695
DRWN:ATSEE 2010/02/11
CH'KD:PTLIM 2004/12/08
APPR:MLONG 2010/06/05
D7

DESCRIPTION
REV

QUALITY SYMBOLS
F_A=0
F_C=0
F_P=0

GENERAL TOLERANCES (UNLESS SPECIFIED)

	mm	INCH
4 PLACES	± ---	± ---
3 PLACES	± ---	± ---
2 PLACES	± 0.20	± ---
1 PLACE	± ---	± ---

ANGULAR ± 3 °

DRAFT WHERE APPLICABLE MUST REMAIN WITHIN DIMENSIONS

DIMENSION STYLE: MM ONLY
SCALE: NTS
DESIGN UNITS: METRIC
THIRD ANGLE PROJECTION

DRAWN BY: KCHO DATE: 2004/11/05
CHECKED BY: PTLIM DATE: 2004/12/08
APPROVED BY: SCLOW DATE: 2004/12/10

TITLE: 2.54MM PITCH DUAL ROW HEADER SINGLE WAFER, T/H

molex MOLEX INCORPORATED

MATERIAL NO.: SEE TABLE
DOCUMENT NO.: SD-87914-013
SHEET NO.: 29 OF 46
SIZE: A3

THIS DRAWING CONTAINS INFORMATION THAT IS PROPRIETARY TO MOLEX INCORPORATED AND SHOULD NOT BE USED WITHOUT WRITTEN PERMISSION

tb_frame_A3_P_AM_T
Rev. F 2009/06/18

PART NO FOR TRAY PACKAGING	PART NO. FOR TUBE WITHOUT CAP PACKAGING	PART NO. FOR TUBE WITH CAP PACKAGING	PART NO. FOR TAPE & REEL WITHOUT CAP PACKAGING	PART NO. FOR TAPE & REEL WITH CAP PACKAGING	CKT SIZE	VOID POSITION	PLATING TYPE	DIMENSION				
								A	B	F	M	P
87914-4811	-------	-------	-------	-------	48	-----	1	60.96	58.42	10.92	5.84	2.79
87914-4821	-------	-------	-------	-------	48	-----	1	60.96	58.42	12.25	7.00	2.96
87914-4812	-------	-------	-------	-------	48	-----	2	60.96	58.42	10.92	5.84	2.79
87914-4822	-------	-------	-------	-------	48	-----	2	60.96	58.42	12.25	7.00	2.96
87914-4813	-------	-------	-------	-------	48	-----	3	60.96	58.42	10.92	5.84	2.79
87914-4823	-------	-------	-------	-------	48	-----	3	60.96	58.42	12.25	7.00	2.96
87914-4814	-------	-------	-------	-------	48	-----	4	60.96	58.42	10.92	5.84	2.79
87914-4824	-------	-------	-------	-------	48	-----	4	60.96	58.42	12.25	7.00	2.96
87914-4815	-------	-------	-------	-------	48	-----	5	60.96	58.42	10.92	5.84	2.79
87914-4825	-------	-------	-------	-------	48	-----	5	60.96	58.42	12.25	7.00	2.96
87914-4816	-------	-------	-------	-------	48	-----	6	60.96	58.42	10.92	5.84	2.79
87914-4826	-------	-------	-------	-------	48	-----	6	60.96	58.42	12.25	7.00	2.96

PG8, +879140108
EC NO: S2010-0695
DRWN:ATSEE 2010/02/11
CH'KD:PTLIM 2004/12/08
APPR:MLONG 2010/06/05
D7
REV DESCRIPTION

QUALITY SYMBOLS
F/A=0
F/C=0
F/P=0

GENERAL TOLERANCES (UNLESS SPECIFIED)

	mm	INCH
4 PLACES	± ---	± ---
3 PLACES	± ---	± ---
2 PLACES	± 0.20	± ---
1 PLACE	± ---	± ---

ANGULAR ± 3 °

DRAFT WHERE APPLICABLE MUST REMAIN WITHIN DIMENSIONS

DIMENSION STYLE: MM ONLY
SCALE: NTS
DESIGN UNITS: METRIC
THIRD ANGLE PROJECTION

DRAWN BY: KCHO DATE: 2004/11/05
CHECKED BY: PTLIM DATE: 2004/12/08
APPROVED BY: SCLOW DATE: 2004/12/10

TITLE: 2.54MM PITCH DUAL ROW HEADER SINGLE WAFER, T/H

molex MOLEX INCORPORATED

MATERIAL NO.: SEE TABLE
DOCUMENT NO.: SD-87914-013
SHEET NO.: 30 OF 46
SIZE: A3

THIS DRAWING CONTAINS INFORMATION THAT IS PROPRIETARY TO MOLEX INCORPORATED AND SHOULD NOT BE USED WITHOUT WRITTEN PERMISSION

PART NO FOR TRAY PACKAGING	PART NO. FOR TUBE WITHOUT CAP PACKAGING	PART NO. FOR TUBE WITH CAP PACKAGING	PART NO. FOR TAPE & REEL WITHOUT CAP PACKAGING	PART NO. FOR TAPE & REEL WITH CAP PACKAGING	CKT SIZE	VOID POSITION	PLATING TYPE	DIMENSION				
								A	B	F	M	P
87914-5011	-------	-------	-------	-------	50	-----	1	63.50	60.96	10.92	5.84	2.79
87914-5021	-------	-------	-------	-------	50	-----	1	63.50	60.96	12.25	7.00	2.96
87914-5012	-------	-------	-------	-------	50	-----	2	63.50	60.96	10.92	5.84	2.79
87914-5022	-------	-------	-------	-------	50	-----	2	63.50	60.96	12.25	7.00	2.96
87914-5013	-------	-------	-------	-------	50	-----	3	63.50	60.96	10.92	5.84	2.79
87914-5023	-------	-------	-------	-------	50	-----	3	63.50	60.96	12.25	7.00	2.96
87914-5014	-------	-------	-------	-------	50	-----	4	63.50	60.96	10.92	5.84	2.79
87914-5024	-------	-------	-------	-------	50	-----	4	63.50	60.96	12.25	7.00	2.96
87914-5015	-------	-------	-------	-------	50	-----	5	63.50	60.96	10.92	5.84	2.79
87914-5025	-------	-------	-------	-------	50	-----	5	63.50	60.96	12.25	7.00	2.96
87914-5016	-------	-------	-------	-------	50	-----	6	63.50	60.96	10.92	5.84	2.79
87914-5026	-------	-------	-------	-------	50	-----	6	63.50	60.96	12.25	7.00	2.96
87914-0002	-------	-------	-------	-------	50	-----	8	63.50	60.96	18.54	11.58	4.47

PG8, +879140108
EC NO: S2010-0695
DRWN:ATSEE 2010/02/11
CH'KD:PTLIM 2004/12/08
APPR:MLONG 2010/06/05
D7

DESCRIPTION
REV

QUALITY SYMBOLS
F/A=0
F/C=0
F/P=0

GENERAL TOLERANCES (UNLESS SPECIFIED)

	mm	INCH
4 PLACES	± ---	± ---
3 PLACES	± ---	± ---
2 PLACES	± 0.20	± ---
1 PLACE	± ---	± ---

ANGULAR ± 3 °

DRAFT WHERE APPLICABLE MUST REMAIN WITHIN DIMENSIONS

DIMENSION STYLE: MM ONLY
SCALE: NTS
DESIGN UNITS: METRIC
THIRD ANGLE PROJECTION

DRAWN BY: KCHO DATE: 2004/11/05
CHECKED BY: PTLIM DATE: 2004/12/08
APPROVED BY: SCLOW DATE: 2004/12/10

TITLE: 2.54MM PITCH DUAL ROW HEADER SINGLE WAFER, T/H

molex MOLEX INCORPORATED

MATERIAL NO.: SEE TABLE
DOCUMENT NO.: SD-87914-013
SHEET NO.: 31 OF 46
SIZE: A3

THIS DRAWING CONTAINS INFORMATION THAT IS PROPRIETARY TO MOLEX INCORPORATED AND SHOULD NOT BE USED WITHOUT WRITTEN PERMISSION

tb_frame_A3_P_AM_T
Rev. F 2009/06/18

PART NO FOR BULK PACKAGING	PART NO. FOR TUBE WITHOUT CAP PACKAGING	PART NO. FOR TUBE WITH CAP PACKAGING	PART NO. FOR TAPE & REEL WITHOUT CAP PACKAGING	PART NO. FOR TAPE & REEL WITH CAP PACKAGING	CKT SIZE	VOID POSITION	PLATING TYPE	DIMENSION				
								A	B	F	M	P
87914-5211	-------	-------	-------	-------	52	-----	1	66.04	63.50	10.92	5.84	2.79
87914-5221	-------	-------	-------	-------	52	-----	1	66.04	63.50	12.25	7.00	2.96
87914-5212	-------	-------	-------	-------	52	-----	2	66.04	63.50	10.92	5.84	2.79
87914-5222	-------	-------	-------	-------	52	-----	2	66.04	63.50	12.25	7.00	2.96
87914-5213	-------	-------	-------	-------	52	-----	3	66.04	63.50	10.92	5.84	2.79
87914-5223	-------	-------	-------	-------	52	-----	3	66.04	63.50	12.25	7.00	2.96
87914-5214	-------	-------	-------	-------	52	-----	4	66.04	63.50	10.92	5.84	2.79
87914-5224	-------	-------	-------	-------	52	-----	4	66.04	63.50	12.25	7.00	2.96
87914-5215	-------	-------	-------	-------	52	-----	5	66.04	63.50	10.92	5.84	2.79
87914-5225	-------	-------	-------	-------	52	-----	5	66.04	63.50	12.25	7.00	2.96
87914-5216	-------	-------	-------	-------	52	-----	6	66.04	63.50	10.92	5.84	2.79
87914-5226	-------	-------	-------	-------	52	-----	6	66.04	63.50	12.25	7.00	2.96

PG8, +879140108
EC NO: S2010-0695
DRWN:ATSEE 2010/02/11
CH'KD:PTLIM 2004/12/08
APPR:MLONG 2010/06/05
D7

DESCRIPTION
REV

QUALITY SYMBOLS
F_A=0
F_C=0
F_P=0

GENERAL TOLERANCES (UNLESS SPECIFIED)

	mm	INCH
4 PLACES	± ---	± ---
3 PLACES	± ---	± ---
2 PLACES	± 0.20	± ---
1 PLACE	± ---	± ---

ANGULAR ± 3 °

DRAFT WHERE APPLICABLE MUST REMAIN WITHIN DIMENSIONS

DIMENSION STYLE: MM ONLY
SCALE: NTS
DESIGN UNITS: METRIC
THIRD ANGLE PROJECTION

DRAWN BY: KCHO DATE: 2004/11/05
CHECKED BY: PTLIM DATE: 2004/12/08
APPROVED BY: SCLOW DATE: 2004/12/10

TITLE: 2.54MM PITCH DUAL ROW HEADER SINGLE WAFER, T/H

molex MOLEX INCORPORATED

MATERIAL NO.: SEE TABLE
DOCUMENT NO.: SD-87914-013
SHEET NO.: 32 OF 46
SIZE: A3

THIS DRAWING CONTAINS INFORMATION THAT IS PROPRIETARY TO MOLEX INCORPORATED AND SHOULD NOT BE USED WITHOUT WRITTEN PERMISSION

PART NO FOR BULK PACKAGING	PART NO. FOR TUBE WITHOUT CAP PACKAGING	PART NO. FOR TUBE WITH CAP PACKAGING	PART NO. FOR TAPE & REEL WITHOUT CAP PACKAGING	PART NO. FOR TAPE & REEL WITH CAP PACKAGING	CKT SIZE	VOID POSITION	PLATING TYPE	DIMENSION				
								A	B	F	M	P
87914-5411	-------	-------	-------	-------	54	-----	1	68.58	66.04	10.92	5.84	2.79
87914-5421	-------	-------	-------	-------	54	-----	1	68.58	66.04	12.25	7.00	2.96
87914-5412	-------	-------	-------	-------	54	-----	2	68.58	66.04	10.92	5.84	2.79
87914-5422	-------	-------	-------	-------	54	-----	2	68.58	66.04	12.25	7.00	2.96
87914-5413	-------	-------	-------	-------	54	-----	3	68.58	66.04	10.92	5.84	2.79
87914-5423	-------	-------	-------	-------	54	-----	3	68.58	66.04	12.25	7.00	2.96
87914-5414	-------	-------	-------	-------	54	-----	4	68.58	66.04	10.92	5.84	2.79
87914-5424	-------	-------	-------	-------	54	-----	4	68.58	66.04	12.25	7.00	2.96
87914-5415	-------	-------	-------	-------	54	-----	5	68.58	66.04	10.92	5.84	2.79
87914-5425	-------	-------	-------	-------	54	-----	5	68.58	66.04	12.25	7.00	2.96
87914-5416	-------	-------	-------	-------	54	-----	6	68.58	66.04	10.92	5.84	2.79
87914-5426	-------	-------	-------	-------	54	-----	6	68.58	66.04	12.25	7.00	2.96

PG8, +879140108
EC NO: S2010-0695
DRWN:ATSEE 2010/02/11
CH'KD:PTLIM 2004/12/08
APPR:MLONG 2010/06/05
D7

DESCRIPTION
REV

QUALITY SYMBOLS
F_A=0
F_C=0
F_P=0

GENERAL TOLERANCES (UNLESS SPECIFIED)

	mm	INCH
4 PLACES	± ---	± ---
3 PLACES	± ---	± ---
2 PLACES	± 0.20	± ---
1 PLACE	± ---	± ---
ANGULAR ± 3 °		

DRAFT WHERE APPLICABLE MUST REMAIN WITHIN DIMENSIONS

DIMENSION STYLE: MM ONLY
SCALE: NTS
DESIGN UNITS: METRIC
THIRD ANGLE PROJECTION

DRAWN BY: KCHO DATE: 2004/11/05
CHECKED BY: PTLIM DATE: 2004/12/08
APPROVED BY: SCLOW DATE: 2004/12/10

TITLE: 2.54MM PITCH DUAL ROW HEADER SINGLE WAFER, T/H

molex MOLEX INCORPORATED

MATERIAL NO.: SEE TABLE
DOCUMENT NO.: SD-87914-013
SHEET NO.: 33 OF 46
SIZE: A3

THIS DRAWING CONTAINS INFORMATION THAT IS PROPRIETARY TO MOLEX INCORPORATED AND SHOULD NOT BE USED WITHOUT WRITTEN PERMISSION

PART NO FOR BULK PACKAGING	PART NO. FOR TUBE WITHOUT CAP PACKAGING	PART NO. FOR TUBE WITH CAP PACKAGING	PART NO. FOR TAPE & REEL WITHOUT CAP PACKAGING	PART NO. FOR TAPE & REEL WITH CAP PACKAGING	CKT SIZE	VOID POSITION	PLATING TYPE	DIMENSION				
								A	B	F	M	P
87914-5611	-------	-------	-------	-------	56	-----	1	71.12	68.58	10.92	5.84	2.79
87914-5621	-------	-------	-------	-------	56	-----	1	71.12	68.58	12.25	7.00	2.96
87914-5612	-------	-------	-------	-------	56	-----	2	71.12	68.58	10.92	5.84	2.79
87914-5622	-------	-------	-------	-------	56	-----	2	71.12	68.58	12.25	7.00	2.96
87914-5613	-------	-------	-------	-------	56	-----	3	71.12	68.58	10.92	5.84	2.79
87914-5623	-------	-------	-------	-------	56	-----	3	71.12	68.58	12.25	7.00	2.96
87914-5614	-------	-------	-------	-------	56	-----	4	71.12	68.58	10.92	5.84	2.79
87914-5624	-------	-------	-------	-------	56	-----	4	71.12	68.58	12.25	7.00	2.96
87914-5615	-------	-------	-------	-------	56	-----	5	71.12	68.58	10.92	5.84	2.79
87914-5625	-------	-------	-------	-------	56	-----	5	71.12	68.58	12.25	7.00	2.96
87914-5616	-------	-------	-------	-------	56	-----	6	71.12	68.58	10.92	5.84	2.79
87914-5626	-------	-------	-------	-------	56	-----	6	71.12	68.58	12.25	7.00	2.96

PG8, +879140108
EC NO: S2010-0695
DRWN:ATSEE 2010/02/11
CH'KD:PTLIM 2004/12/08
APPR:MLONG 2010/06/05
D7

DESCRIPTION
REV

QUALITY SYMBOLS
F_A=0
F_C=0
F_P=0

GENERAL TOLERANCES (UNLESS SPECIFIED)

	mm	INCH
4 PLACES	± ---	± ---
3 PLACES	± ---	± ---
2 PLACES	± 0.20	± ---
1 PLACE	± ---	± ---

ANGULAR ± 3 °

DRAFT WHERE APPLICABLE MUST REMAIN WITHIN DIMENSIONS

DIMENSION STYLE: MM ONLY
SCALE: NTS
DESIGN UNITS: METRIC
THIRD ANGLE PROJECTION

DRAWN BY: KCHO DATE: 2004/11/05
CHECKED BY: PTLIM DATE: 2004/12/08
APPROVED BY: SCLOW DATE: 2004/12/10

TITLE: 2.54MM PITCH DUAL ROW HEADER SINGLE WAFER, T/H

molex MOLEX INCORPORATED

MATERIAL NO.: SEE TABLE
DOCUMENT NO.: SD-87914-013
SHEET NO.: 34 OF 46
SIZE: A3

THIS DRAWING CONTAINS INFORMATION THAT IS PROPRIETARY TO MOLEX INCORPORATED AND SHOULD NOT BE USED WITHOUT WRITTEN PERMISSION

PART NO FOR BULK PACKAGING	PART NO. FOR TUBE WITHOUT CAP PACKAGING	PART NO. FOR TUBE WITH CAP PACKAGING	PART NO. FOR TAPE & REEL WITHOUT CAP PACKAGING	PART NO. FOR TAPE & REEL WITH CAP PACKAGING	CKT SIZE	VOID POSITION	PLATING TYPE	DIMENSION				
								A	B	F	M	P
87914-5811	-------	-------	-------	-------	58	-----	1	73.66	71.12	10.92	5.84	2.79
87914-5821	-------	-------	-------	-------	58	-----	1	73.66	71.12	12.25	7.00	2.96
87914-5812	-------	-------	-------	-------	58	-----	2	73.66	71.12	10.92	5.84	2.79
87914-5822	-------	-------	-------	-------	58	-----	2	73.66	71.12	12.25	7.00	2.96
87914-5813	-------	-------	-------	-------	58	-----	3	73.66	71.12	10.92	5.84	2.79
87914-5823	-------	-------	-------	-------	58	-----	3	73.66	71.12	12.25	7.00	2.96
87914-5814	-------	-------	-------	-------	58	-----	4	73.66	71.12	10.92	5.84	2.79
87914-5824	-------	-------	-------	-------	58	-----	4	73.66	71.12	12.25	7.00	2.96
87914-5815	-------	-------	-------	-------	58	-----	5	73.66	71.12	10.92	5.84	2.79
87914-5825	-------	-------	-------	-------	58	-----	5	73.66	71.12	12.25	7.00	2.96
87914-5816	-------	-------	-------	-------	58	-----	6	73.66	71.12	10.92	5.84	2.79
87914-5826	-------	-------	-------	-------	58	-----	6	73.66	71.12	12.25	7.00	2.96

PG8, +879140108
EC NO: S2010-0695
DRWN:ATSEE 2010/02/11
CH'KD:PTLIM 2004/12/08
APPR:MLONG 2010/06/05
D7

DESCRIPTION
REV

QUALITY SYMBOLS
F_A=0
F_C=0
F_P=0

GENERAL TOLERANCES (UNLESS SPECIFIED)

	mm	INCH
4 PLACES	± ---	± ---
3 PLACES	± ---	± ---
2 PLACES	± 0.20	± ---
1 PLACE	± ---	± ---
ANGULAR ± 3 °		

DRAFT WHERE APPLICABLE MUST REMAIN WITHIN DIMENSIONS

DIMENSION STYLE: MM ONLY
SCALE: NTS
DESIGN UNITS: METRIC
THIRD ANGLE PROJECTION

DRAWN BY: KCHO DATE: 2004/11/05
CHECKED BY: PTLIM DATE: 2004/12/08
APPROVED BY: SCLOW DATE: 2004/12/10

TITLE: 2.54MM PITCH DUAL ROW HEADER SINGLE WAFER, T/H

molex MOLEX INCORPORATED

MATERIAL NO.: SEE TABLE
DOCUMENT NO.: SD-87914-013
SHEET NO.: 35 OF 46
SIZE: A3

THIS DRAWING CONTAINS INFORMATION THAT IS PROPRIETARY TO MOLEX INCORPORATED AND SHOULD NOT BE USED WITHOUT WRITTEN PERMISSION

PART NO FOR BULK PACKAGING	PART NO. FOR TUBE WITHOUT CAP PACKAGING	PART NO. FOR TUBE WITH CAP PACKAGING	PART NO. FOR TAPE & REEL WITHOUT CAP PACKAGING	PART NO. FOR TAPE & REEL WITH CAP PACKAGING	CKT SIZE	VOID POSITION	PLATING TYPE	DIMENSION				
								A	B	F	M	P
87914-6011	-------	-------	-------	-------	60	-----	1	76.20	73.66	10.92	5.84	2.79
87914-6021	-------	-------	-------	-------	60	-----	1	76.20	73.66	12.25	7.00	2.96
87914-6012	-------	-------	-------	-------	60	-----	2	76.20	73.66	10.92	5.84	2.79
87914-6022	-------	-------	-------	-------	60	-----	2	76.20	73.66	12.25	7.00	2.96
87914-6013	-------	-------	-------	-------	60	-----	3	76.20	73.66	10.92	5.84	2.79
87914-6023	-------	-------	-------	-------	60	-----	3	76.20	73.66	12.25	7.00	2.96
87914-6014	-------	-------	-------	-------	60	-----	4	76.20	73.66	10.92	5.84	2.79
87914-6024	-------	-------	-------	-------	60	-----	4	76.20	73.66	12.25	7.00	2.96
87914-6015	-------	-------	-------	-------	60	-----	5	76.20	73.66	10.92	5.84	2.79
87914-6025	-------	-------	-------	-------	60	-----	5	76.20	73.66	12.25	7.00	2.96
87914-6016	-------	-------	-------	-------	60	-----	6	76.20	73.66	10.92	5.84	2.79
87914-6026	-------	-------	-------	-------	60	-----	6	76.20	73.66	12.25	7.00	2.96

PG8, +879140108
EC NO: S2010-0695
DRWN:ATSEE 2010/02/11
CH'KD:PTLIM 2004/12/08
APPR:MLONG 2010/06/05
D7

DESCRIPTION
REV

QUALITY SYMBOLS
F_A=0
F_C=0
F_P=0

GENERAL TOLERANCES (UNLESS SPECIFIED)

	mm	INCH
4 PLACES	± ---	± ---
3 PLACES	± ---	± ---
2 PLACES	± 0.20	± ---
1 PLACE	± ---	± ---

ANGULAR ± 3 °

DRAFT WHERE APPLICABLE MUST REMAIN WITHIN DIMENSIONS

DIMENSION STYLE: MM ONLY
SCALE: NTS
DESIGN UNITS: METRIC
THIRD ANGLE PROJECTION

DRAWN BY: KCHO DATE: 2004/11/05
CHECKED BY: PTLIM DATE: 2004/12/08
APPROVED BY: SCLOW DATE: 2004/12/10

TITLE: 2.54MM PITCH DUAL ROW HEADER SINGLE WAFER, T/H

molex MOLEX INCORPORATED

MATERIAL NO.: SEE TABLE
DOCUMENT NO.: SD-87914-013
SHEET NO.: 36 OF 46
SIZE: A3

THIS DRAWING CONTAINS INFORMATION THAT IS PROPRIETARY TO MOLEX INCORPORATED AND SHOULD NOT BE USED WITHOUT WRITTEN PERMISSION

PART NO FOR BULK PACKAGING	PART NO. FOR TUBE WITHOUT CAP PACKAGING	PART NO. FOR TUBE WITH CAP PACKAGING	PART NO. FOR TAPE & REEL WITHOUT CAP PACKAGING	PART NO. FOR TAPE & REEL WITH CAP PACKAGING	CKT SIZE	VOID POSITION	PLATING TYPE	DIMENSION				
								A	B	F	M	P
87914-6211	-------	-------	-------	-------	62	-----	1	78.74	76.20	10.92	5.84	2.79
87914-6221	-------	-------	-------	-------	62	-----	1	78.74	76.20	12.25	7.00	2.96
87914-6212	-------	-------	-------	-------	62	-----	2	78.74	76.20	10.92	5.84	2.79
87914-6222	-------	-------	-------	-------	62	-----	2	78.74	76.20	12.25	7.00	2.96
87914-6213	-------	-------	-------	-------	62	-----	3	78.74	76.20	10.92	5.84	2.79
87914-6223	-------	-------	-------	-------	62	-----	3	78.74	76.20	12.25	7.00	2.96
87914-6214	-------	-------	-------	-------	62	-----	4	78.74	76.20	10.92	5.84	2.79
87914-6224	-------	-------	-------	-------	62	-----	4	78.74	76.20	12.25	7.00	2.96
87914-6215	-------	-------	-------	-------	62	-----	5	78.74	76.20	10.92	5.84	2.79
87914-6225	-------	-------	-------	-------	62	-----	5	78.74	76.20	12.25	7.00	2.96
87914-6216	-------	-------	-------	-------	62	-----	6	78.74	76.20	10.92	5.84	2.79
87914-6226	-------	-------	-------	-------	62	-----	6	78.74	76.20	12.25	7.00	2.96

PG8, +879140108
EC NO: S2010-0695
DRWN:ATSEE 2010/02/11
CH'KD:PTLIM 2004/12/08
APPR:MLONG 2010/06/05
D7

DESCRIPTION
REV

QUALITY SYMBOLS
F/A=0
F/C=0
F/P=0

GENERAL TOLERANCES (UNLESS SPECIFIED)

	mm	INCH
4 PLACES	± ---	± ---
3 PLACES	± ---	± ---
2 PLACES	± 0.20	± ---
1 PLACE	± ---	± ---
ANGULAR ± 3 °		

DRAFT WHERE APPLICABLE MUST REMAIN WITHIN DIMENSIONS

DIMENSION STYLE: MM ONLY
SCALE: NTS
DESIGN UNITS: METRIC
THIRD ANGLE PROJECTION

DRAWN BY: KCHO DATE: 2004/11/05
CHECKED BY: PTLIM DATE: 2004/12/08
APPROVED BY: SCLOW DATE: 2004/12/10

TITLE: 2.54MM PITCH DUAL ROW HEADER SINGLE WAFER, T/H

molex MOLEX INCORPORATED

MATERIAL NO.: SEE TABLE
DOCUMENT NO.: SD-87914-013
SHEET NO.: 37 OF 46
SIZE: A3

THIS DRAWING CONTAINS INFORMATION THAT IS PROPRIETARY TO MOLEX INCORPORATED AND SHOULD NOT BE USED WITHOUT WRITTEN PERMISSION

PART NO FOR BULK PACKAGING	PART NO. FOR TUBE WITHOUT CAP PACKAGING	PART NO. FOR TUBE WITH CAP PACKAGING	PART NO. FOR TAPE & REEL WITHOUT CAP PACKAGING	PART NO. FOR TAPE & REEL WITH CAP PACKAGING	CKT SIZE	VOID POSITION	PLATING TYPE	DIMENSION				
								A	B	F	M	P
87914-6411	-------	-------	-------	-------	64	-----	1	81.28	78.74	10.92	5.84	2.79
87914-6421	-------	-------	-------	-------	64	-----	1	81.28	78.74	12.25	7.00	2.96
87914-6412	-------	-------	-------	-------	64	-----	2	81.28	78.74	10.92	5.84	2.79
87914-6422	-------	-------	-------	-------	64	-----	2	81.28	78.74	12.25	7.00	2.96
87914-6413	-------	-------	-------	-------	64	-----	3	81.28	78.74	10.92	5.84	2.79
87914-6423	-------	-------	-------	-------	64	-----	3	81.28	78.74	12.25	7.00	2.96
87914-6414	-------	-------	-------	-------	64	-----	4	81.28	78.74	10.92	5.84	2.79
87914-6424	-------	-------	-------	-------	64	-----	4	81.28	78.74	12.25	7.00	2.96
87914-6415	-------	-------	-------	-------	64	-----	5	81.28	78.74	10.92	5.84	2.79
87914-6425	-------	-------	-------	-------	64	-----	5	81.28	78.74	12.25	7.00	2.96
87914-6416	-------	-------	-------	-------	64	-----	6	81.28	78.74	10.92	5.84	2.79
87914-6426	-------	-------	-------	-------	64	-----	6	81.28	78.74	12.25	7.00	2.96

PG8, +879140108
EC NO: S2010-0695
DRWN:ATSEE 2010/02/11
CH'KD:PTLIM 2004/12/08
APPR:MLONG 2010/06/05
D7

DESCRIPTION
REV

QUALITY SYMBOLS
F_A=0
F_C=0
F_P=0

GENERAL TOLERANCES (UNLESS SPECIFIED)

	mm	INCH
4 PLACES	± ---	± ---
3 PLACES	± ---	± ---
2 PLACES	± 0.20	± ---
1 PLACE	± ---	± ---
ANGULAR ± 3 °		

DRAFT WHERE APPLICABLE MUST REMAIN WITHIN DIMENSIONS

DIMENSION STYLE: MM ONLY
SCALE: NTS
DESIGN UNITS: METRIC
THIRD ANGLE PROJECTION

DRAWN BY: KCHO DATE: 2004/11/05
CHECKED BY: PTLIM DATE: 2004/12/08
APPROVED BY: SCLOW DATE: 2004/12/10

TITLE: 2.54MM PITCH DUAL ROW HEADER SINGLE WAFER, T/H

molex MOLEX INCORPORATED

MATERIAL NO.: SEE TABLE
DOCUMENT NO.: SD-87914-013
SHEET NO.: 38 OF 46
SIZE: A3

THIS DRAWING CONTAINS INFORMATION THAT IS PROPRIETARY TO MOLEX INCORPORATED AND SHOULD NOT BE USED WITHOUT WRITTEN PERMISSION

PART NO FOR BULK PACKAGING	PART NO. FOR TUBE WITHOUT CAP PACKAGING	PART NO. FOR TUBE WITH CAP PACKAGING	PART NO. FOR TAPE & REEL WITHOUT CAP PACKAGING	PART NO. FOR TAPE & REEL WITH CAP PACKAGING	CKT SIZE	VOID POSITION	PLATING TYPE	DIMENSION				
								A	B	F	M	P
87914-6611	-------	-------	-------	-------	66	-----	1	83.82	81.28	10.92	5.84	2.79
87914-6621	-------	-------	-------	-------	66	-----	1	83.82	81.28	12.25	7.00	2.96
87914-6612	-------	-------	-------	-------	66	-----	2	83.82	81.28	10.92	5.84	2.79
87914-6622	-------	-------	-------	-------	66	-----	2	83.82	81.28	12.25	7.00	2.96
87914-6613	-------	-------	-------	-------	66	-----	3	83.82	81.28	10.92	5.84	2.79
87914-6623	-------	-------	-------	-------	66	-----	3	83.82	81.28	12.25	7.00	2.96
87914-6614	-------	-------	-------	-------	66	-----	4	83.82	81.28	10.92	5.84	2.79
87914-6624	-------	-------	-------	-------	66	-----	4	83.82	81.28	12.25	7.00	2.96
87914-6615	-------	-------	-------	-------	66	-----	5	83.82	81.28	10.92	5.84	2.79
87914-6625	-------	-------	-------	-------	66	-----	5	83.82	81.28	12.25	7.00	2.96
87914-6616	-------	-------	-------	-------	66	-----	6	83.82	81.28	10.92	5.84	2.79
87914-6626	-------	-------	-------	-------	66	-----	6	83.82	81.28	12.25	7.00	2.96

PG8, +879140108
EC NO: S2010-0695
DRWN:ATSEE 2010/02/11
CH'KD:PTLIM 2004/12/08
APPR:MLONG 2010/06/05
D7
REV DESCRIPTION

QUALITY SYMBOLS
FA=0
FC=0
FP=0

GENERAL TOLERANCES (UNLESS SPECIFIED)

	mm	INCH
4 PLACES	± ---	± ---
3 PLACES	± ---	± ---
2 PLACES	± 0.20	± ---
1 PLACE	± ---	± ---

ANGULAR ± 3 °

DRAFT WHERE APPLICABLE MUST REMAIN WITHIN DIMENSIONS

DIMENSION STYLE: MM ONLY
SCALE: NTS
DESIGN UNITS: METRIC
THIRD ANGLE PROJECTION

DRAWN BY: KCHO DATE: 2004/11/05
CHECKED BY: PTLIM DATE: 2004/12/08
APPROVED BY: SCLOW DATE: 2004/12/10

TITLE: 2.54MM PITCH DUAL ROW HEADER SINGLE WAFER, T/H

molex MOLEX INCORPORATED

MATERIAL NO.: SEE TABLE
DOCUMENT NO.: SD-87914-013
SHEET NO.: 39 OF 46
SIZE: A3

THIS DRAWING CONTAINS INFORMATION THAT IS PROPRIETARY TO MOLEX INCORPORATED AND SHOULD NOT BE USED WITHOUT WRITTEN PERMISSION

PART NO FOR BULK PACKAGING	PART NO. FOR TUBE WITHOUT CAP PACKAGING	PART NO. FOR TUBE WITH CAP PACKAGING	PART NO. FOR TAPE & REEL WITHOUT CAP PACKAGING	PART NO. FOR TAPE & REEL WITH CAP PACKAGING	CKT SIZE	VOID POSITION	PLATING TYPE	DIMENSION				
								A	B	F	M	P
87914-6811	-------	-------	-------	-------	68	-----	1	86.36	83.82	10.92	5.84	2.79
87914-6821	-------	-------	-------	-------	68	-----	1	86.36	83.82	12.25	7.00	2.96
87914-6812	-------	-------	-------	-------	68	-----	2	86.36	83.82	10.92	5.84	2.79
87914-6822	-------	-------	-------	-------	68	-----	2	86.36	83.82	12.25	7.00	2.96
87914-6813	-------	-------	-------	-------	68	-----	3	86.36	83.82	10.92	5.84	2.79
87914-6823	-------	-------	-------	-------	68	-----	3	86.36	83.82	12.25	7.00	2.96
87914-6814	-------	-------	-------	-------	68	-----	4	86.36	83.82	10.92	5.84	2.79
87914-6824	-------	-------	-------	-------	68	-----	4	86.36	83.82	12.25	7.00	2.96
87914-6815	-------	-------	-------	-------	68	-----	5	86.36	83.82	10.92	5.84	2.79
87914-6825	-------	-------	-------	-------	68	-----	5	86.36	83.82	12.25	7.00	2.96
87914-6816	-------	-------	-------	-------	68	-----	6	86.36	83.82	10.92	5.84	2.79
87914-6826	-------	-------	-------	-------	68	-----	6	86.36	83.82	12.25	7.00	2.96

PG8, +879140108
EC NO: S2010-0695
DRWN:ATSEE 2010/02/11
CH'KD:PTLIM 2004/12/08
APPR:MLONG 2010/06/05
D7

DESCRIPTION
REV

QUALITY SYMBOLS
F_A=0
F_C=0
F_P=0

GENERAL TOLERANCES (UNLESS SPECIFIED)

	mm	INCH
4 PLACES	± ---	± ---
3 PLACES	± ---	± ---
2 PLACES	± 0.20	± ---
1 PLACE	± ---	± ---

ANGULAR ± 3 °

DRAFT WHERE APPLICABLE MUST REMAIN WITHIN DIMENSIONS

DIMENSION STYLE: MM ONLY
SCALE: NTS
DESIGN UNITS: METRIC
THIRD ANGLE PROJECTION

DRAWN BY: KCHO DATE: 2004/11/05
CHECKED BY: PTLIM DATE: 2004/12/08
APPROVED BY: SCLOW DATE: 2004/12/10

TITLE: 2.54MM PITCH DUAL ROW HEADER SINGLE WAFER, T/H

molex MOLEX INCORPORATED

MATERIAL NO.: SEE TABLE
DOCUMENT NO.: SD-87914-013
SHEET NO.: 40 OF 46
SIZE: A3

THIS DRAWING CONTAINS INFORMATION THAT IS PROPRIETARY TO MOLEX INCORPORATED AND SHOULD NOT BE USED WITHOUT WRITTEN PERMISSION

PART NO FOR BULK PACKAGING	PART NO. FOR TUBE WITHOUT CAP PACKAGING	PART NO. FOR TUBE WITH CAP PACKAGING	PART NO. FOR TAPE & REEL WITHOUT CAP PACKAGING	PART NO. FOR TAPE & REEL WITH CAP PACKAGING	CKT SIZE	VOID POSITION	PLATING TYPE	DIMENSION				
								A	B	F	M	P
87914-7011	-------	-------	-------	-------	70	-----	1	88.90	86.36	10.92	5.84	2.79
87914-7021	-------	-------	-------	-------	70	-----	1	88.90	86.36	12.25	7.00	2.96
87914-7012	-------	-------	-------	-------	70	-----	2	88.90	86.36	10.92	5.84	2.79
87914-7022	-------	-------	-------	-------	70	-----	2	88.90	86.36	12.25	7.00	2.96
87914-7013	-------	-------	-------	-------	70	-----	3	88.90	86.36	10.92	5.84	2.79
87914-7023	-------	-------	-------	-------	70	-----	3	88.90	86.36	12.25	7.00	2.96
87914-7014	-------	-------	-------	-------	70	-----	4	88.90	86.36	10.92	5.84	2.79
87914-7024	-------	-------	-------	-------	70	-----	4	88.90	86.36	12.25	7.00	2.96
87914-7015	-------	-------	-------	-------	70	-----	5	88.90	86.36	10.92	5.84	2.79
87914-7025	-------	-------	-------	-------	70	-----	5	88.90	86.36	12.25	7.00	2.96
87914-7016	-------	-------	-------	-------	70	-----	6	88.90	86.36	10.92	5.84	2.79
87914-7026	-------	-------	-------	-------	70	-----	6	88.90	86.36	12.25	7.00	2.96

PG8, +879140108
EC NO: S2010-0695
DRWN:ATSEE 2010/02/11
CH'KD:PTLIM 2004/12/08
APPR:MLONG 2010/06/05
D7

DESCRIPTION
REV

QUALITY SYMBOLS
F/A=0
F/C=0
F/P=0

GENERAL TOLERANCES (UNLESS SPECIFIED)

	mm	INCH
4 PLACES	± ---	± ---
3 PLACES	± ---	± ---
2 PLACES	± 0.20	± ---
1 PLACE	± ---	± ---
ANGULAR ± 3 °		

DRAFT WHERE APPLICABLE MUST REMAIN WITHIN DIMENSIONS

DIMENSION STYLE: MM ONLY
SCALE: NTS
DESIGN UNITS: METRIC
THIRD ANGLE PROJECTION

DRAWN BY: KCHO DATE: 2004/11/05
CHECKED BY: PTLIM DATE: 2004/12/08
APPROVED BY: SCLOW DATE: 2004/12/10

TITLE: 2.54MM PITCH DUAL ROW HEADER SINGLE WAFER, T/H

molex MOLEX INCORPORATED

MATERIAL NO.: SEE TABLE
DOCUMENT NO.: SD-87914-013
SHEET NO.: 41 OF 46
SIZE: A3

THIS DRAWING CONTAINS INFORMATION THAT IS PROPRIETARY TO MOLEX INCORPORATED AND SHOULD NOT BE USED WITHOUT WRITTEN PERMISSION

tb_frame_A3_P_AM_T
Rev. F 2009/06/18

PART NO FOR BULK PACKAGING	PART NO. FOR TUBE WITHOUT CAP PACKAGING	PART NO. FOR TUBE WITH CAP PACKAGING	PART NO. FOR TAPE & REEL WITHOUT CAP PACKAGING	PART NO. FOR TAPE & REEL WITH CAP PACKAGING	CKT SIZE	VOID POSITION	PLATING TYPE	DIMENSION				
								A	B	F	M	P
87914-7211	-------	-------	-------	-------	72	-----	1	91.44	88.90	10.92	5.84	2.79
87914-7221	-------	-------	-------	-------	72	-----	1	91.44	88.90	12.25	7.00	2.96
87914-7212	-------	-------	-------	-------	72	-----	2	91.44	88.90	10.92	5.84	2.79
87914-7222	-------	-------	-------	-------	72	-----	2	91.44	88.90	12.25	7.00	2.96
87914-7213	-------	-------	-------	-------	72	-----	3	91.44	88.90	10.92	5.84	2.79
87914-7223	-------	-------	-------	-------	72	-----	3	91.44	88.90	12.25	7.00	2.96
87914-7214	-------	-------	-------	-------	72	-----	4	91.44	88.90	10.92	5.84	2.79
87914-7224	-------	-------	-------	-------	72	-----	4	91.44	88.90	12.25	7.00	2.96
87914-7215	-------	-------	-------	-------	72	-----	5	91.44	88.90	10.92	5.84	2.79
87914-7225	-------	-------	-------	-------	72	-----	5	91.44	88.90	12.25	7.00	2.96
87914-7216	-------	-------	-------	-------	72	-----	6	91.44	88.90	10.92	5.84	2.79
87914-7226	-------	-------	-------	-------	72	-----	6	91.44	88.90	12.25	7.00	2.96

PG8, +879140108
EC NO: S2010-0695
DRWN:ATSEE 2010/02/11
CH'KD:PTLIM 2004/12/08
APPR:MLONG 2010/06/05
D7

DESCRIPTION
REV

QUALITY SYMBOLS
F_A=0
F_C=0
F_P=0

GENERAL TOLERANCES (UNLESS SPECIFIED)

	mm	INCH
4 PLACES	± ---	± ---
3 PLACES	± ---	± ---
2 PLACES	± 0.20	± ---
1 PLACE	± ---	± ---

ANGULAR ± 3 °

DRAFT WHERE APPLICABLE MUST REMAIN WITHIN DIMENSIONS

DIMENSION STYLE: MM ONLY
SCALE: NTS
DESIGN UNITS: METRIC
THIRD ANGLE PROJECTION

DRAWN BY: KCHO DATE: 2004/11/05
CHECKED BY: PTLIM DATE: 2004/12/08
APPROVED BY: SCLOW DATE: 2004/12/10

TITLE: 2.54MM PITCH DUAL ROW HEADER SINGLE WAFER, T/H

molex MOLEX INCORPORATED

MATERIAL NO.: SEE TABLE
DOCUMENT NO.: SD-87914-013
SHEET NO.: 42 OF 46
SIZE: A3

THIS DRAWING CONTAINS INFORMATION THAT IS PROPRIETARY TO MOLEX INCORPORATED AND SHOULD NOT BE USED WITHOUT WRITTEN PERMISSION

PART NO FOR BULK PACKAGING	PART NO. FOR TUBE WITHOUT CAP PACKAGING	PART NO. FOR TUBE WITH CAP PACKAGING	PART NO. FOR TAPE & REEL WITHOUT CAP PACKAGING	PART NO. FOR TAPE & REEL WITH CAP PACKAGING	CKT SIZE	VOID POSITION	PLATING TYPE	DIMENSION				
								A	B	F	M	P
87914-7411	-------	-------	-------	-------	74	-----	1	93.98	91.44	10.92	5.84	2.79
87914-7421	-------	-------	-------	-------	74	-----	1	93.98	91.44	12.25	7.00	2.96
87914-7412	-------	-------	-------	-------	74	-----	2	93.98	91.44	10.92	5.84	2.79
87914-7422	-------	-------	-------	-------	74	-----	2	93.98	91.44	12.25	7.00	2.96
87914-7413	-------	-------	-------	-------	74	-----	3	93.98	91.44	10.92	5.84	2.79
87914-7423	-------	-------	-------	-------	74	-----	3	93.98	91.44	12.25	7.00	2.96
87914-7414	-------	-------	-------	-------	74	-----	4	93.98	91.44	10.92	5.84	2.79
87914-7424	-------	-------	-------	-------	74	-----	4	93.98	91.44	12.25	7.00	2.96
87914-7415	-------	-------	-------	-------	74	-----	5	93.98	91.44	10.92	5.84	2.79
87914-7425	-------	-------	-------	-------	74	-----	5	93.98	91.44	12.25	7.00	2.96
87914-7416	-------	-------	-------	-------	74	-----	6	93.98	91.44	10.92	5.84	2.79
87914-7426	-------	-------	-------	-------	74	-----	6	93.98	91.44	12.25	7.00	2.96

PG8, +879140108
EC NO: S2010-0695
DRWN:ATSEE 2010/02/11
CH'KD:PTLIM 2004/12/08
APPR:MLONG 2010/06/05
D7

DESCRIPTION
REV

QUALITY SYMBOLS
F_A=0
F_C=0
F_P=0

GENERAL TOLERANCES (UNLESS SPECIFIED)

	mm	INCH
4 PLACES	± ---	± ---
3 PLACES	± ---	± ---
2 PLACES	± 0.20	± ---
1 PLACE	± ---	± ---
ANGULAR ± 3 °		

DRAFT WHERE APPLICABLE MUST REMAIN WITHIN DIMENSIONS

DIMENSION STYLE: MM ONLY
SCALE: NTS
DESIGN UNITS: METRIC
THIRD ANGLE PROJECTION

DRAWN BY: KCHO DATE: 2004/11/05
CHECKED BY: PTLIM DATE: 2004/12/08
APPROVED BY: SCLOW DATE: 2004/12/10

TITLE: 2.54MM PITCH DUAL ROW HEADER SINGLE WAFER, T/H

molex MOLEX INCORPORATED

MATERIAL NO.: SEE TABLE
DOCUMENT NO.: SD-87914-013
SHEET NO.: 43 OF 46
SIZE: A3

THIS DRAWING CONTAINS INFORMATION THAT IS PROPRIETARY TO MOLEX INCORPORATED AND SHOULD NOT BE USED WITHOUT WRITTEN PERMISSION

PART NO FOR BULK PACKAGING	PART NO. FOR TUBE WITHOUT CAP PACKAGING	PART NO. FOR TUBE WITH CAP PACKAGING	PART NO. FOR TAPE & REEL WITHOUT CAP PACKAGING	PART NO. FOR TAPE & REEL WITH CAP PACKAGING	CKT SIZE	VOID POSITION	PLATING TYPE	DIMENSION				
								A	B	C	D	E
87914-7611	-------	-------	-------	-------	76	-----	1	96.52	93.98	10.92	5.84	2.79
87914-7621	-------	-------	-------	-------	76	-----	1	96.52	93.98	12.25	7.00	2.96
87914-7612	-------	-------	-------	-------	76	-----	2	96.52	93.98	10.92	5.84	2.79
87914-7622	-------	-------	-------	-------	76	-----	2	96.52	93.98	12.25	7.00	2.96
87914-7613	-------	-------	-------	-------	76	-----	3	96.52	93.98	10.92	5.84	2.79
87914-7623	-------	-------	-------	-------	76	-----	3	96.52	93.98	12.25	7.00	2.96
87914-7614	-------	-------	-------	-------	76	-----	4	96.52	93.98	10.92	5.84	2.79
87914-7624	-------	-------	-------	-------	76	-----	4	96.52	93.98	12.25	7.00	2.96
87914-7615	-------	-------	-------	-------	76	-----	5	96.52	93.98	10.92	5.84	2.79
87914-7625	-------	-------	-------	-------	76	-----	5	96.52	93.98	12.25	7.00	2.96
87914-7616	-------	-------	-------	-------	76	-----	6	96.52	93.98	10.92	5.84	2.79
87914-7626	-------	-------	-------	-------	76	-----	6	96.52	93.98	12.25	7.00	2.96

PG8, +879140108
EC NO: S2010-0695
DRWN:ATSEE 2010/02/11
CH'KD:PTLIM 2004/12/08
APPR:MLONG 2010/06/05
D7
REV DESCRIPTION

QUALITY SYMBOLS
FA=0
FC=0
FP=0

GENERAL TOLERANCES (UNLESS SPECIFIED)

	mm	INCH
4 PLACES	± ---	± ---
3 PLACES	± ---	± ---
2 PLACES	± 0.20	± ---
1 PLACE	± ---	± ---
ANGULAR ± 3 °		

DRAFT WHERE APPLICABLE MUST REMAIN WITHIN DIMENSIONS

DIMENSION STYLE: MM ONLY
SCALE: NTS
DESIGN UNITS: METRIC
THIRD ANGLE PROJECTION

DRAWN BY: KCHO DATE: 2004/11/05
CHECKED BY: PTLIM DATE: 2004/12/08
APPROVED BY: SCLOW DATE: 2004/12/10

TITLE: 2.54MM PITCH DUAL ROW HEADER SINGLE WAFER, T/H

molex MOLEX INCORPORATED

MATERIAL NO.: SEE TABLE
DOCUMENT NO.: SD-87914-013
SHEET NO.: 44 OF 46
SIZE: A3

THIS DRAWING CONTAINS INFORMATION THAT IS PROPRIETARY TO MOLEX INCORPORATED AND SHOULD NOT BE USED WITHOUT WRITTEN PERMISSION

PART NO FOR BULK PACKAGING	PART NO. FOR TUBE WITHOUT CAP PACKAGING	PART NO. FOR TUBE WITH CAP PACKAGING	PART NO. FOR TAPE & REEL WITHOUT CAP PACKAGING	PART NO. FOR TAPE & REEL WITH CAP PACKAGING	CKT SIZE	VOID POSITION	PLATING TYPE	DIMENSION				
								A	B	F	M	P
87914-7811	-------	-------	-------	-------	78	-----	1	99.06	96.52	10.92	5.84	2.79
87914-7821	-------	-------	-------	-------	78	-----	1	99.06	96.52	12.25	7.00	2.96
87914-7812	-------	-------	-------	-------	78	-----	2	99.06	96.52	10.92	5.84	2.79
87914-7822	-------	-------	-------	-------	78	-----	2	99.06	96.52	12.25	7.00	2.96
87914-7813	-------	-------	-------	-------	78	-----	3	99.06	96.52	10.92	5.84	2.79
87914-7823	-------	-------	-------	-------	78	-----	3	99.06	96.52	12.25	7.00	2.96
87914-7814	-------	-------	-------	-------	78	-----	4	99.06	96.52	10.92	5.84	2.79
87914-7824	-------	-------	-------	-------	78	-----	4	99.06	96.52	12.25	7.00	2.96
87914-7815	-------	-------	-------	-------	78	-----	5	99.06	96.52	10.92	5.84	2.79
87914-7825	-------	-------	-------	-------	78	-----	5	99.06	96.52	12.25	7.00	2.96
87914-7816	-------	-------	-------	-------	78	-----	6	99.06	96.52	10.92	5.84	2.79
87914-7826	-------	-------	-------	-------	78	-----	6	99.06	96.52	12.25	7.00	2.96

PG8, +879140108
EC NO: S2010-0695
DRWN:ATSEE 2010/02/11
CH'KD:PTLIM 2004/12/08
APPR:MLONG 2010/06/05
D7

REV | DESCRIPTION

QUALITY SYMBOLS
FA=0
FC=0
FP=0

GENERAL TOLERANCES (UNLESS SPECIFIED)

	mm	INCH
4 PLACES	± ---	± ---
3 PLACES	± ---	± ---
2 PLACES	± 0.20	± ---
1 PLACE	± ---	± ---
ANGULAR ± 3 °		

DRAFT WHERE APPLICABLE MUST REMAIN WITHIN DIMENSIONS

DIMENSION STYLE: MM ONLY
SCALE: NTS
DESIGN UNITS: METRIC
THIRD ANGLE PROJECTION

DRAWN BY: KCHO DATE: 2004/11/05
CHECKED BY: PTLIM DATE: 2004/12/08
APPROVED BY: SCLOW DATE: 2004/12/10

TITLE: 2.54MM PITCH DUAL ROW HEADER SINGLE WAFER, T/H

molex MOLEX INCORPORATED

MATERIAL NO.: SEE TABLE
DOCUMENT NO.: SD-87914-013
SHEET NO.: 45 OF 46
SIZE: A3

THIS DRAWING CONTAINS INFORMATION THAT IS PROPRIETARY TO MOLEX INCORPORATED AND SHOULD NOT BE USED WITHOUT WRITTEN PERMISSION

PART NO FOR BULK PACKAGING	PART NO. FOR TUBE WITHOUT CAP PACKAGING	PART NO. FOR TUBE WITH CAP PACKAGING	PART NO. FOR TAPE & REEL WITHOUT CAP PACKAGING	PART NO. FOR TAPE & REEL WITH CAP PACKAGING	CKT SIZE	VOID POSITION	PLATING TYPE	DIMENSION				
								A	B	F	M	P
87914-8011	-------	-------	-------	-------	80	-----	1	101.60	99.06	10.92	5.84	2.79
87914-8021	-------	-------	-------	-------	80	-----	1	101.60	99.06	12.25	7.00	2.96
87914-8012	-------	-------	-------	-------	80	-----	2	101.60	99.06	10.92	5.84	2.79
87914-8022	-------	-------	-------	-------	80	-----	2	101.60	99.06	12.25	7.00	2.96
87914-8013	-------	-------	-------	-------	80	-----	3	101.60	99.06	10.92	5.84	2.79
87914-8023	-------	-------	-------	-------	80	-----	3	101.60	99.06	12.25	7.00	2.96
87914-8014	-------	-------	-------	-------	80	-----	4	101.60	99.06	10.92	5.84	2.79
87914-8024	-------	-------	-------	-------	80	-----	4	101.60	99.06	12.25	7.00	2.96
87914-8015	-------	-------	-------	-------	80	-----	5	101.60	99.06	10.92	5.84	2.79
87914-8025	-------	-------	-------	-------	80	-----	5	101.60	99.06	12.25	7.00	2.96
87914-8016	-------	-------	-------	-------	80	-----	6	101.60	99.06	10.92	5.84	2.79
87914-8026	-------	-------	-------	-------	80	-----	6	101.60	99.06	12.25	7.00	2.96

PG8, +879140108
EC NO: S2010-0695
DRWN:ATSEE 2010/02/11
CH'KD:PTLIM 2004/12/08
APPR:MLONG 2010/06/05
D7

DESCRIPTION
REV

QUALITY SYMBOLS
F_A=0
F_C=0
F_P=0

GENERAL TOLERANCES (UNLESS SPECIFIED)

	mm	INCH
4 PLACES	± ---	± ---
3 PLACES	± ---	± ---
2 PLACES	± 0.20	± ---
1 PLACE	± ---	± ---
ANGULAR ± 3 °		

DRAFT WHERE APPLICABLE MUST REMAIN WITHIN DIMENSIONS

DIMENSION STYLE: MM ONLY
SCALE: NTS
DESIGN UNITS: METRIC
THIRD ANGLE PROJECTION

DRAWN BY: KCHO DATE: 2004/11/05
CHECKED BY: PTLIM DATE: 2004/12/08
APPROVED BY: SCLOW DATE: 2004/12/10

TITLE: 2.54MM PITCH DUAL ROW HEADER SINGLE WAFER, T/H

molex MOLEX INCORPORATED

MATERIAL NO.: SEE TABLE
DOCUMENT NO.: SD-87914-013
SHEET NO.: 46 OF 46
SIZE: A3

THIS DRAWING CONTAINS INFORMATION THAT IS PROPRIETARY TO MOLEX INCORPORATED AND SHOULD NOT BE USED WITHOUT WRITTEN PERMISSION