MODEL IH
Filter Inductors
High Current

VISHAY DALE®

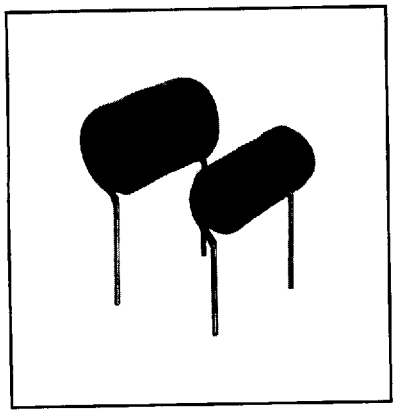

FEATURES
- Printed circuit mounting
- Pre-tinned leads
- Protected by polyolefin tubing - flame retardant UL type VW-1 per MIL-I-23053/5, Class 3 requirements

APPLICATIONS
Noise filtering for switching regulators, power amplifiers, power supplies and SCR or Triac control circuits.

ELECTRICAL SPECIFICATIONS
Inductance: Measured at 1.0 V with zero DC current.
Incremental Current: The typical current at which the inductance will be decreased by 5% from its initial zero DC value.
Operating Temperature: - 55°C to + 125°C (no load).
- 55°C to + 75°C (at full rated current).

STANDARD ELECTRICAL SPECIFICATIONS

MODEL	IND. @ 1 kHz (µH)	TOL.	DCR MAX. (Ohms)	RATED CURRENT (Max. Amps)	INCRE-MENTAL CURRENT (Amps)
IH-3	5	± 10%	.015	10.0	25
IH-3	10	± 10%	.018	9.0	19
IH-3	27	± 10%	.035	7.0	12
IH-3	50	± 10%	.050	5.6	8
IH-3	100	± 10%	.065	5.2	6
IH-3	150	± 10%	.075	5.0	5
IH-3	250	± 10%	.090	5.0	4
IH-5	5	± 10%	.012	14.0	25
IH-5	10	± 10%	.015	12.0	19
IH-5	27	± 10%	.025	9.0	13
IH-5	50	± 10%	.030	8.0	10
IH-5	68	± 10%	.035	7.5	9
IH-5	100	± 10%	.050	7.5	7
IH-5	150	± 10%	.060	7.0	5
IH-10	5	± 10%	.010	19.0	25
IH-10	10	± 10%	.012	16.0	19
IH-10	27	± 10%	.018	12.5	12
IH-10	50	± 10%	.025	11.0	10
IH-10	68	± 10%	.027	10.0	8
IH-10	100	± 10%	.030	10.0	7
IH-15	5	± 10%	.008	24.0	25
IH-15	10	± 10%	.010	20.0	19
IH-15	27	± 10%	.015	16.0	14
IH-15	50	± 10%	.020	15.0	10

PART MARKING

— Dale
— Model
— Inductance value
— Date code

HOW TO ORDER

IH-5	10µH	± 10%
MODEL	INDUCTANCE VALUE	INDUCTANCE TOLERANCE

DIMENSIONAL CONFIGURATIONS

[Numbers in brackets indicate millimeters]

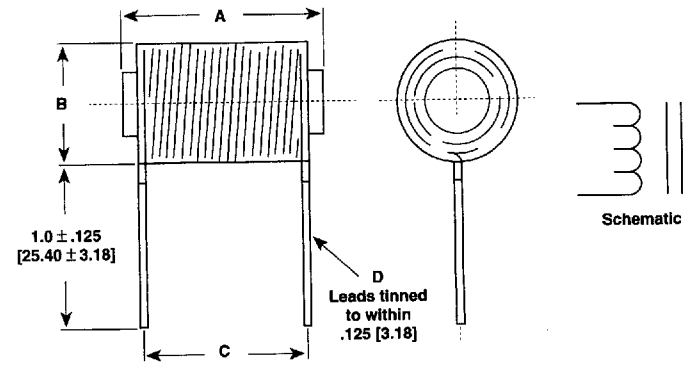

MODEL	IND. (µH)	A (Max.)	B (Max.)	C ± .062 [1.59]	D ± .005 [.130]
IH-3	5	.875 [22.23]	.600 [15.24]	.500 [12.70]	.042 [1.067]
IH-3	10	1.125 [28.58]	.625 [15.88]	.687 [17.45]	.042 [1.067]
IH-3	27	.875 [22.23]	.800 [20.32]	.437 [11.10]	.042 [1.067]
IH-3	50	.875 [22.23]	.800 [20.32]	.750 [19.05]	.042 [1.067]
IH-3	100	1.125 [28.58]	.800 [20.32]	.937 [23.80]	.042 [1.067]
IH-3	150	1.375 [34.93]	.800 [20.32]	1.062 [26.97]	.042 [1.067]
IH-3	250	1.625 [41.28]	.800 [20.32]	1.312 [33.32]	.042 [1.067]
IH-5	5	.875 [22.23]	.625 [15.88]	.750 [19.05]	.053 [1.35]
IH-5	10	1.125 [28.58]	.625 [15.88]	1.0 [25.40]	.053 [1.35]
IH-5	27	.875 [22.23]	.840 [21.34]	.562 [14.27]	.053 [1.35]
IH-5	50	1.125 [28.58]	.840 [21.34]	.750 [19.05]	.053 [1.35]
IH-5	68	1.125 [28.58]	.860 [21.84]	.875 [22.23]	.053 [1.35]
IH-5	100	1.375 [34.93]	.860 [21.84]	1.0 [25.40]	.053 [1.35]
IH-5	150	1.625 [41.28]	.860 [21.84]	1.250 [31.75]	.053 [1.35]
IH-10	5	1.125 [28.58]	.635 [16.13]	.812 [20.62]	.065 [1.65]
IH-10	10	1.375 [34.93]	.635 [16.13]	1.218 [30.94]	.065 [1.65]
IH-10	27	1.125 [28.58]	.935 [23.75]	.687 [17.45]	.065 [1.65]
IH-10	50	1.375 [34.93]	.935 [23.75]	.937 [23.80]	.065 [1.65]
IH-10	68	1.375 [34.93]	.935 [23.75]	1.125 [28.58]	.065 [1.65]
IH-10	100	1.625 [41.28]	.935 [23.75]	1.312 [33.32]	.065 [1.65]
IH-15	5	1.375 [34.93]	.700 [17.78]	.937 [23.80]	.082 [2.08]
IH-15	10	1.687 [42.85]	.700 [17.78]	1.50 [38.10]	.082 [2.08]
IH-15	27	1.375 [34.93]	1.0 [25.40]	.937 [23.80]	.082 [2.08]
IH-15	50	1.625 [41.28]	1.0 [25.40]	1.125 [28.58]	.082 [2.08]

www.DataSheet.in