FEATURES

- **1215 - 1400 MHz**
- **22.5° LSB, 337.5° Range**
- **TTL Driver**

4 BIT

MODEL NO. CPS42127

PHASE SHIFTER,4 SECTION

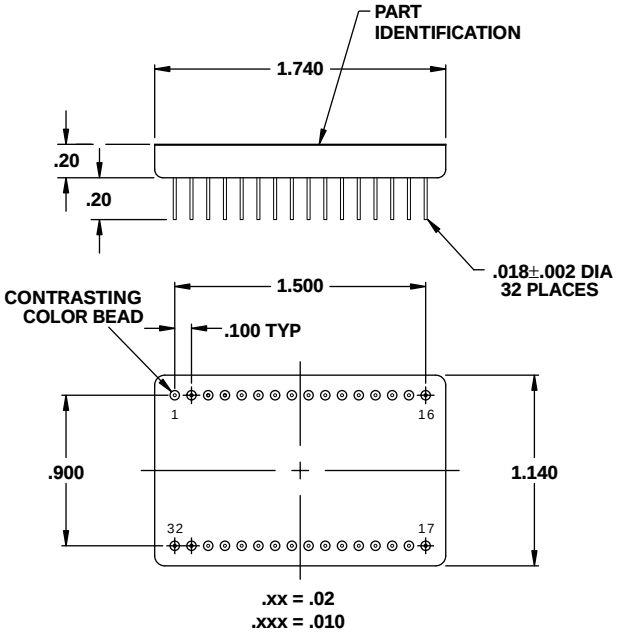

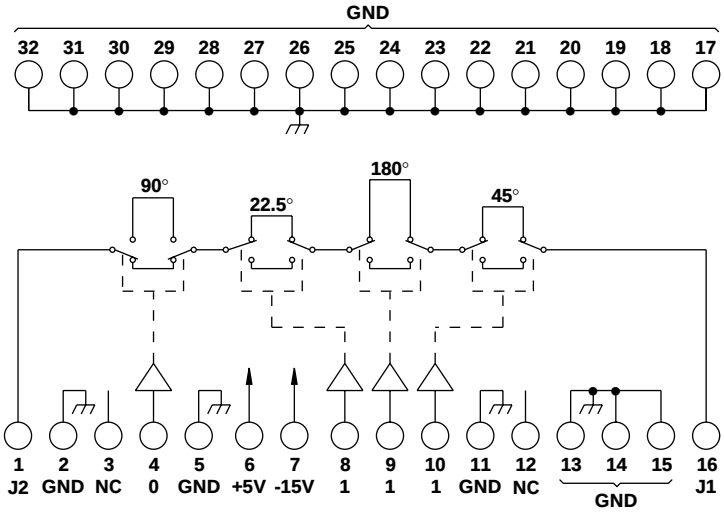

NC = NO CONNECTION

TYPICAL PERFORMANCE
at 25°C

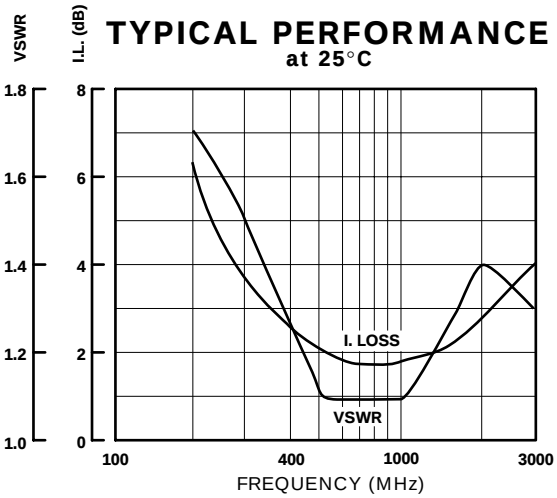

GUARANTEED PERFORMANCE

Parameter		Min	Typ	Max	Units	Conditions
Operating Frequency		1215		1400	MHz	
DC Current			8	250	mA	At +5 VDC Supply
			75	200	mA	At -15 VCD Supply
Control Type			TTL			4 Lines Logic "0" = Refer Phase Logic "1" = Phase Shift
Control Current	*High*		0	±20	µA	VIH = +5.0V
	Low		0	±20	µA	VIL = +0.8 V
Insertion Loss		1.05	1.9	2.55	dB	At 20° C
		0.80		2.80	dB	At Temperature Extremes
Phase:	*Steps*		22.5		DEG	22.5, 45, 90, 180
	Range		337.5		DEG	At 1215 MHz
	Accuracy			±6	DEG	
	Linearity		1.5	3.0	DEG	
VSWR			1.25/1	1.5/1		1215 - 1400 MHz
Impedance			50		OHMS	
Time Delay		650	850	1.050	SEC	
Switching Speed			.660	3.5	µSEC	50% TTL to 90% / 10% RF
Transition (Rise/Fall) Time			.043		µSEC	10% / 90% or 90% / 10% RF
Switching (Video) Transients			36		mV	Peak Value
Intercept Points	*2nd*		+64		dBm	575 / 400 MHz
	3rd		+42		dBm	287.5 / 400 MHz
RF Power	*Operate*		+28	+10	dBm	0.1 dB Compression
	No Damage			+30	dBm	
Operating Temperature		-54	+25	+80	°C	TA