www.DataSheet4U.com

EVERLIGHT ELECTRONICS CO., LTD.

Hall Integrated Circuit

MODEL NO : HI401/T19

Features :

- 4V to 20V operation.
- High reliability.
- Small size.
- Output compatible with all digital logic families.
- Reverse voltage protection.

Description :

- The HI401/T19 is a magnetic sensor used in electric commutation of DC brushless motor applications mostly. The HI401/T19 has a latching behavior and requires a magnetic north and south pole for correct function. The output does not change if the magnetic field is removed. The sensor is designed for industrial and automotive applications and operates at as low as 4 volts.

Applications :

- Brushless DC motor.
- Rotation detection.
- Displacement detection.
- Speed sensing.

PART	CHIP MATERIAL	COLOR
HALL IC	SI	BLACK

www.DataSheet4U.com

www.DataSheet4U.com

EVERLIGHT ELECTRONICS CO., LTD.

Hall Integrated Circuit

MODEL NO : HI401/T19

■ NOTES：

1. This drawing measure is a standard value. All dimensions are in millimeter.
2. In case of designation is toleranc± 0.3 mm.
3. Lead spacing is measured where the leads emerge from the package.
4. Protruded resin under flange 1.0mm Max.
5. Lens color: Black.
6. Above specification may be changed without notice. EVERLIGHT will reserve authority on material change for above specification.
7. These specification sheets include materials protected under copyright of EVERLIGHT corporation. Please don't reproduce or cause anyone to reproduce them without EVERLIGHT consent.
8. When using this produce, please observe the absolute maximum ratings and the instructions for use outlined in these specification sheets. EVERLIGHT assumes no responsibility for any damage resulting from use of the product which does not comply with the absolute maximum ratings and the instructions included in these specification sheets.

■ Package Dimension :

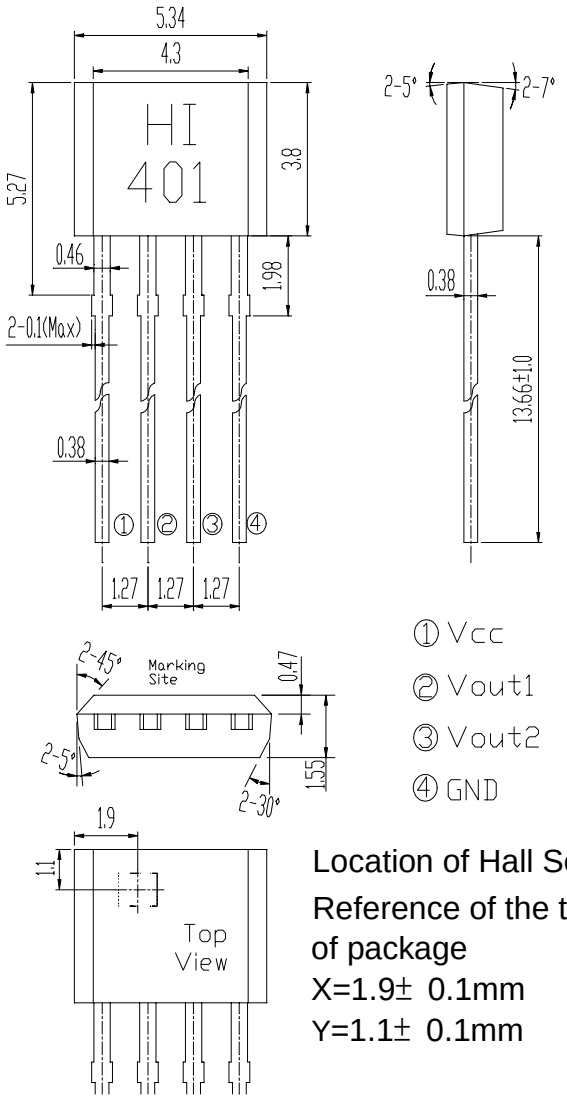

① Vcc
② Vout1
③ Vout2
④ GND

Location of Hall Sensor:
Reference of the top-left of package
X=1.9± 0.1mm
Y=1.1± 0.1mm

www.DataSheet4U.com

www.DataSheet4U.com

EVERLIGHT ELECTRONICS CO., LTD.

Hall Integrated Circuit

MODEL NO : HI401/T19

■Absolute Maximum Ratings at T_A = 25℃

Parameter	Symbol	Rating	Unit	Notice
Supply Voltage	Vcc	20	V	
Supply Current	Icc	25	mA	
Output Current	Iout	Continuous 300 Hold 400 Peak(Start up) 600	mA	
Maximum Power Dissipation	P_D	500	mW	
Operating Ambient Temperature	T_A	-20 ~ +85	℃	
Storage Temperature	Tstg	-55 ~ +120	℃	
Soldering Temperature	Tsol	260	℃	1/16 inches from body for 5 seconds

■Electronic Characteristics : T_A = 25℃

Parameter	Symbol	MIN.	TYP.	MAX.	Unit	Condition
Supply Voltage	Vcc	4	---	20	V	Operating
Output Saturation Voltage	$V_{CE(SAT)}$	---	250	600	mV	Vcc=14V I_{OUT}=400mA B>Bop
Supply Current	Icc	---	18	25	mA	Vcc=20V Output Open
Output Leakage Current	I_{LEAK}	---	---	10	μA	V_{CE}=14V Vcc=14V
Output Rise Time	tr	---	3.0	10	μS	Vcc=14V, R_L=820Ω, C_L=20pF
Output Fall Time	tf	---	0.3	1.5	μS	
Switch Time Differential	△t	---	---	10	μS	

■Magnetic Specification : T_A = 25℃

Condition:Vcc=20V,Bs=MAX[ABS(Bop),ABS(Brp)] Unit:: Gauss

Bin Number	Bin1	Bin2	Bin3	Bin4
Bs	<50	<75	<100	<125

www.DataSheet4U.com

www.DataSheet4U.com

EVERLIGHT ELECTRONICS CO., LTD.

Hall Integrated Circuit

MODEL NO : HI401/T19

■Typical Characteristics Curves:

Fig. 1 Supply Current V.S. Supply Voltage

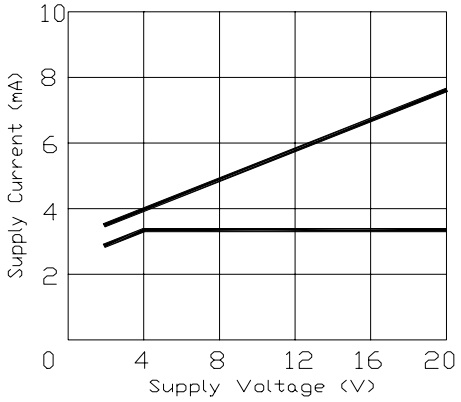

Fig. 2 Output Low Voltage V.S. Supply Voltage

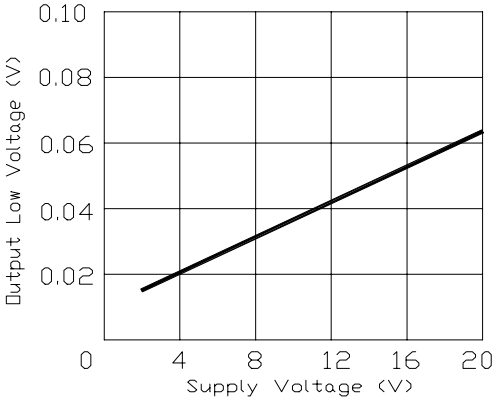

Fig. 3 Switch Points (Bop,Brp) V.S. Supply Voltage

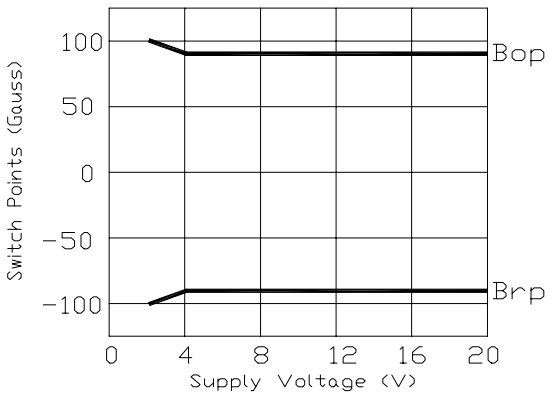

Fig. 4 Switch Points V.S. Ambient Temperature

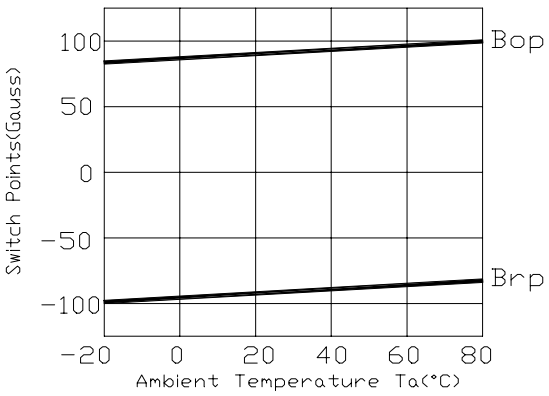

Fig. 5 Supply Current V.S. Ambient Temperature

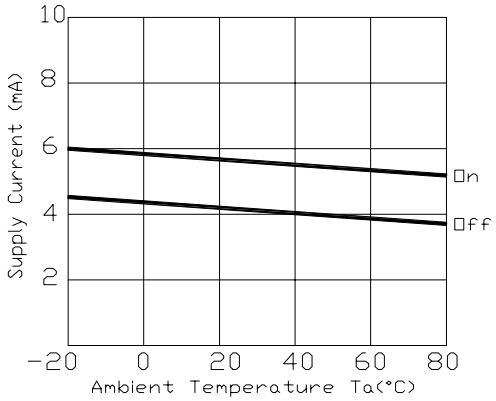

Fig. 6 Hysteresis Deviation V.S. Ambient Temperature

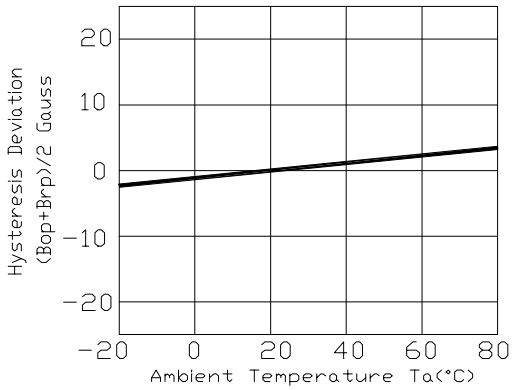

www.DataSheet4U.com

www.DataSheet4U.com

EVERLIGHT ELECTRONICS CO., LTD.

Hall Integrated Circuit

MODEL NO : HI401/T19

■ Function Block Diagram：

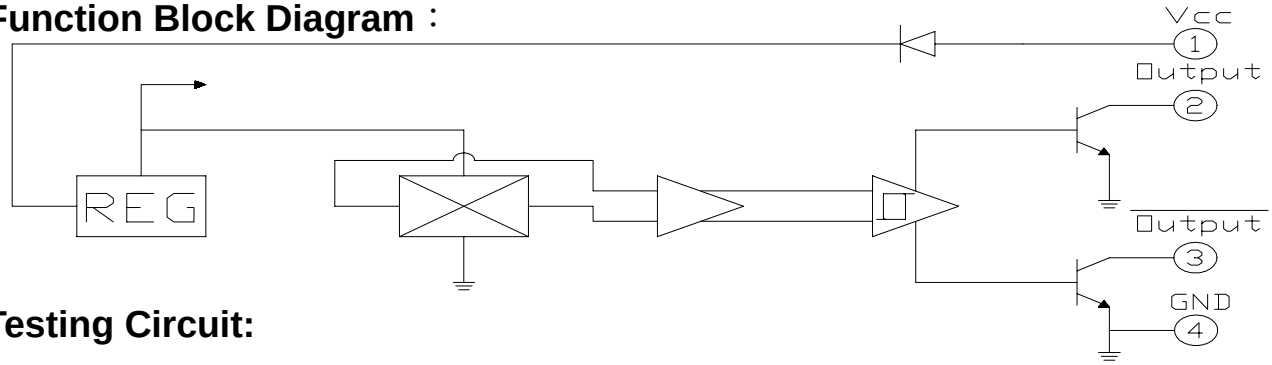

■ Testing Circuit:

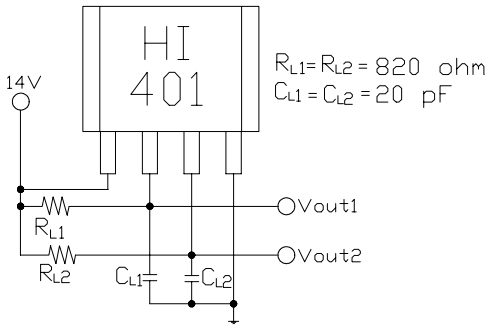

■ Reliability:

The reliability of products shall be satisfied with items listed below.
Confidence level : 90% ; LTPD : 10%

Test Items	Test Conditions	Failure Judgement Criteria	Samples(n) / Defective(c)
Operation life	Vcc=12V,Ta=25℃1000hrs		n=22 , c=0
Temperature cycle	1 cycle -55℃ to +85℃ (30min)(5min)(30min) 50 cycle test	|Bop|<± 20Gauss |Brp|<± 20Gauss 0.8*L<ICC<1.2*U V_{SAT}<1.5*U I_{LEAK}<1.5*U L : Lower Specification Limit U : Upper Specification Limit	n=22 , c=0
Thermal shock	-10℃ to +100℃ (5min) (10sec) (5min) 50 cycle test		n=22 , c=0
High temperature storage	Temp : +150℃ 1000hrs		n=22 , c=0
Low temperature storage	Temp : -55℃ 1000hrs		n=22 , c=0
High temperature High humidity	TA : 85℃ RH : 85% 1000hrs		n=22 , c=0
Solder heat	Temp : 260 ± 10℃ sec 4mm from the bottom of the package		n=22 , c=0

www.DataSheet4U.com

www.DataSheet4U.com

EVERLIGHT ELECTRONICS CO., LTD.

Hall Integrated Circuit

MODEL NO : HI401/T19

■ Packing Specifications: (UNIT : mm)

1.Bag:

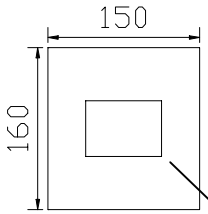

3.Carton:

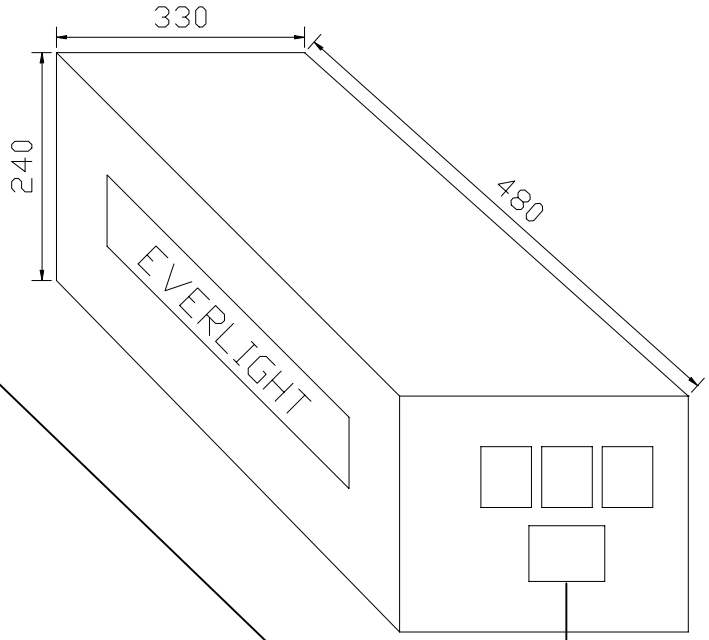

2.Box:

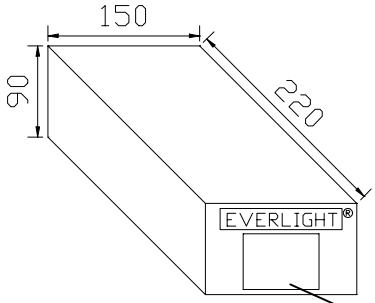

■ Packing Quantity Specification:

1.1000Pcs/1Bag,10Bags/1Box
2.10Boxes/1Carton

■ Label Specification:

CPN : Customer's Production Number
P/N : Production Number
QTY : Packing Quantity
CAT : Ranks
HUE : Reference
REF : Reference
LOT NO : Lot Number
MADE IN TAIWAN : Production Place

Label

www.DataSheet4U.com