www.DataSheet4U.com

EVERLIGHT ELECTRONICS CO., LTD.



# Infrared Remote-control Receiver Module

MODEL NO : HI402

## Features :

- 4V to 20V operation.
- No need for reverse voltage.
- High reliability.
- Small size.
- Output compatible with all digital logic families.

## Description :

- The HI402 is a magnetic sensor used in electric commutation of DC brushless motor applications mostly. The HI402 has a latching behavior and requires a magnetic north and south pole for correct function. The output does not change if the magnetic field is removed. The sensor is designed for industrial and automotive applications and operates at as low as 4 volts.

## Applications :

- Brushless DC motor.
- Rotation detection.
- Displacement detection.
- Speed sensing.

| PART | CHIP MATERIAL | COLOR |
|---|---|---|
| HALL IC | SI | BLACK |

www.DataSheet4U.com

www.DataSheet4U.com

# EVERLIGHT ELECTRONICS CO., LTD.



## Infrared Remote-control Receiver Module

MODEL NO : HI402

## NOTES :

1. This drawing measure is a standard value. All dimensions are in millimeter.
2. In case of designation is toleranc± 0.3 mm.
3. Lead spacing is measured where the leads emerge from the package.
4. Protruded resin under flange 1.0mm Max.
5. Lens color: Black.
6. Above specification may be changed without notice. EVERLIGHT will reserve authority on material change for above specification.
7. These specification sheets include materials protected under copyright of EVERLIGHT corporation. Please don't reproduce or cause anyone to reproduce them without EVERLIGHT consent.
8. When using this produce, please observe the absolute maximum ratings and the instructions for use outlined in these specification sheets. EVERLIGHT assumes no responsibility for any damage resulting from use of the product which does not comply with the absolute maximum ratings and the instructions included in these specification sheets.

## Package Dimension :

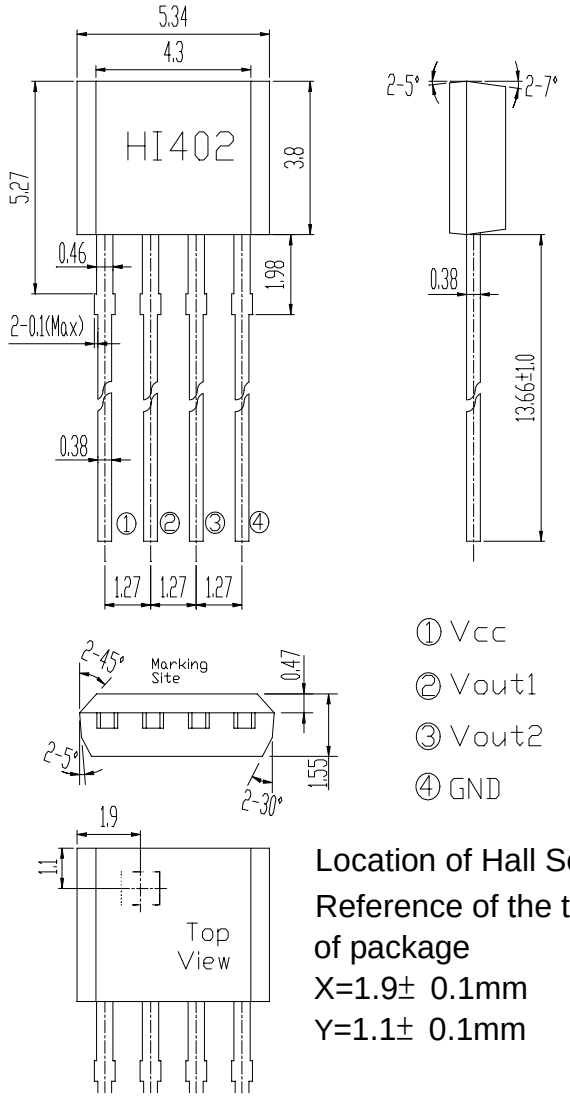


Location of Hall Sensor:
Reference of the top-left of package
X=1.9± 0.1mm
Y=1.1± 0.1mm

www.DataSheet4U.com

www.DataSheet4U.com

EVERLIGHT ELECTRONICS CO., LTD.



# Infrared Remote-control Receiver Module

MODEL NO : HI402

## ■Absolute Maximum Ratings at $T_A$ = 25℃

| Parameter | Symbol | Rating | Unit | Notice |
|---|---|---|---|---|
| **Supply Voltage** | Vcc | 20 | V | |
| **Supply Current** | Icc | 25 | mA | |
| **Output Current** | Iout | Continuous 300<br>Hold 400<br>Peak(Start up) 700 | mA | |
| **Maximum Power Dissipation** | $P_D$ | 500 | mW | |
| **Operating Ambient Temperature** | $T_A$ | -20 ~ +85 | ℃ | |
| **Storage Temperature** | Tstg | -55 ~ +120 | ℃ | |
| **Soldering Temperature** | Tsol | 260 | ℃ | 1/16 inches from body for 5 seconds |

## ■Electronic Characteristics : $T_A$ = 25℃

| Parameter | Symbol | MIN. | TYP. | MAX. | Unit | Condition |
|---|---|---|---|---|---|---|
| **Supply Voltage** | Vcc | 4 | --- | 20 | V | Operating |
| **Output Saturation Voltage** | $V_{CE(SAT)}$ | --- | 250 | 500 | mV | Vcc=14V<br>$I_{OUT}$=400mA<br>B>Bop |
| **Supply Current** | Icc | --- | 18 | 25 | mA | Vcc=20V<br>Output Open |
| **Output Leakage Current** | $I_{LEAK}$ | --- | --- | 10 | μA | $V_{CE}$=14V<br>Vcc=14V |
| **Output Rise Time** | tr | --- | 3.0 | 10 | μS | Vcc=14V,<br>$R_L$=820Ω,<br>$C_L$=20pF |
| **Output Fall Time** | tf | --- | 0.3 | 1.5 | μS | |
| **Switch Time Differential** | △t | --- | --- | 10 | μS | |

## ■Magnetic Specification : $T_A$ = 25℃

Condition:Vcc=20V,Bs=MAX[ABS(Bop),ABS(Brp)] Unit:: Gauss

| Bin Number | Bin1 | Bin2 | Bin3 | Bin4 |
|---|---|---|---|---|
| **Bs** | <70 | <100 | <140 | <200 |

www.DataSheet4U.com

www.DataSheet4U.com

EVERLIGHT ELECTRONICS CO., LTD.



# Infrared Remote-control Receiver Module

MODEL NO : HI402

## ■Typical Characteristics Curves:

Fig. 1 Supply Current V.S. Supply Voltage

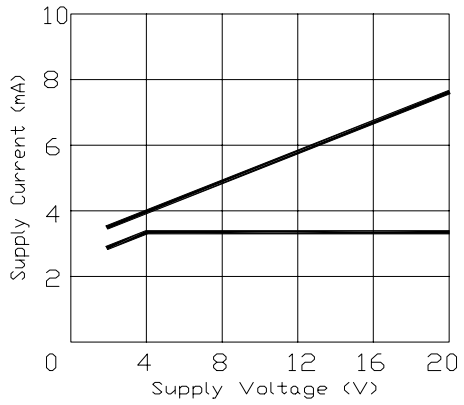


Fig. 2 Output Low Voltage V.S. Supply Voltage

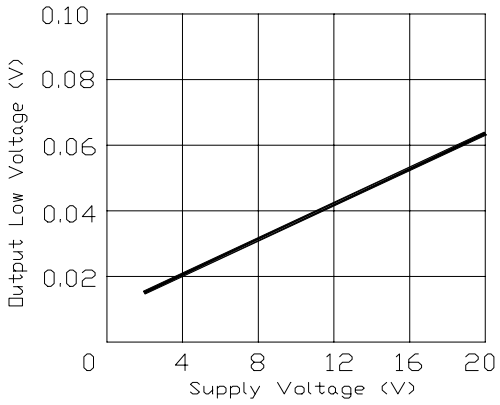


Fig. 3 Switch Points (Bop,Brp) V.S. Supply Voltage

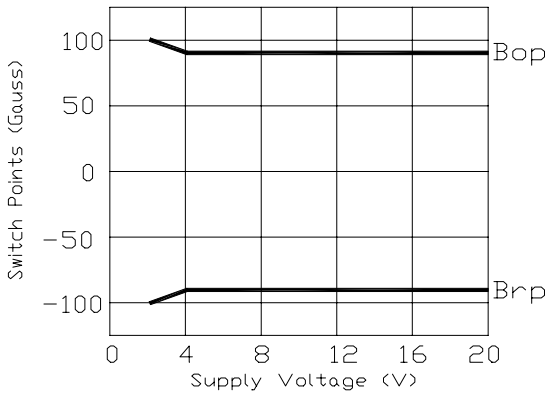


Fig. 4 Switch Points V.S. Ambient Temperature

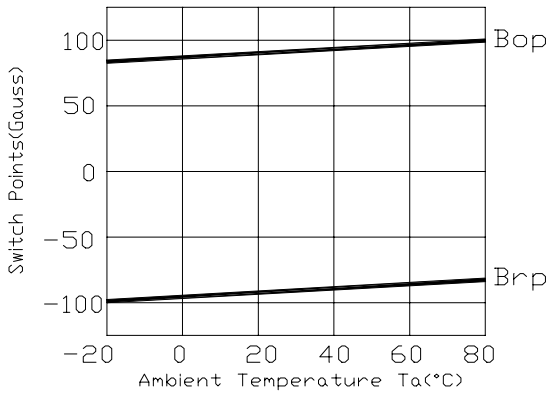


Fig. 5 Supply Current V.S. Ambient Temperature

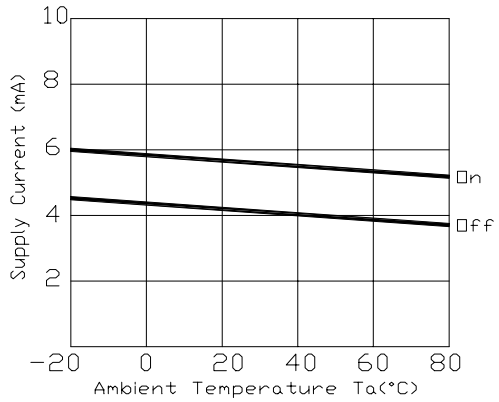


Fig. 6 Hysteresis Deviation V.S. Ambient Temperature

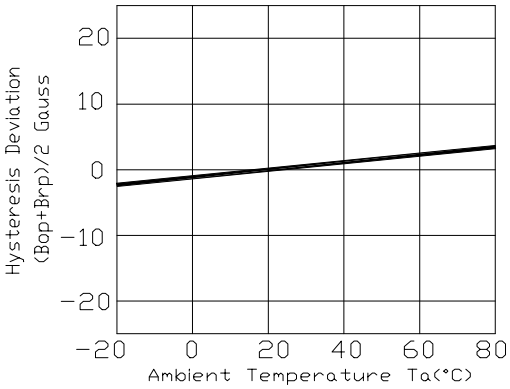


www.DataSheet4U.com

www.DataSheet4U.com

EVERLIGHT ELECTRONICS CO., LTD.



# Infrared Remote-control Receiver Module

MODEL NO : HI402

## Function Block Diagram :

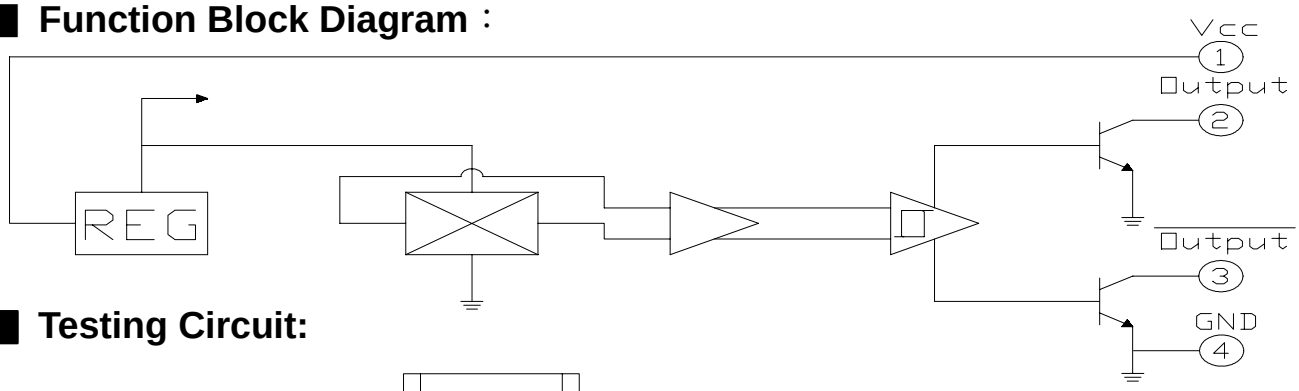


## Testing Circuit:

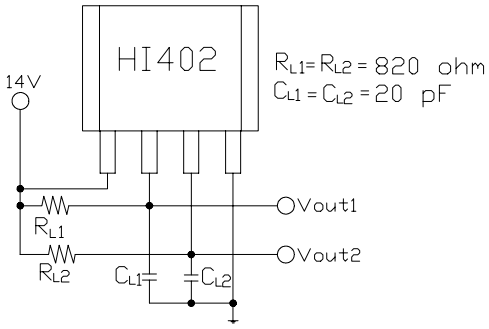


## Reliability:

The reliability of products shall be satisfied with items listed below.
Confidence level : 90% ; LTPD : 10%

| Test Items | Test Conditions | Failure Judgement Criteria | Samples(n) / Defective(c) |
|---|---|---|---|
| Operation life | Vcc=12V,Ta=25℃1000hrs | |n=22 , c=0 |
| Temperature cycle | 1 cycle -55℃ to +85℃ (30min) (30min) 50 cycle test | \|Bop\|<± 20Gauss<br>\|Brp\|<± 20Gauss<br>0.8*L<ICC<1.2*U<br>VSAT<1.5*U<br>ILEAK<1.5*U<br><br>L : Lower Specification Limit<br><br>U : Upper Specification Limit | n=22 , c=0 |
| Thermal shock | -10℃ to +100℃ (5min) (10sec) (5min) 50 cycle test | | n=22 , c=0 |
| High temperature storage | Temp : +150℃ 1000hrs | | n=22 , c=0 |
| Low temperature storage | Temp : -55℃ 1000hrs | | n=22 , c=0 |
| High temperature High humidity | TA : 85℃ RH : 85% 1000hrs | | n=22 , c=0 |
| Solder heat | Temp : 260 ± 10℃ sec 4mm Form the bottom of the package | | n=22 , c=0 |

www.DataSheet4U.com

www.DataSheet4U.com



# Infrared Remote-control Receiver Module

MODEL NO : HI402

## Marking Color(Top View):

| Color | Level |
|---|---|
| Red | Bin1 |
| Blue | Bin2 |
| Yellow | Bin3 |
| Silver | Bin4 |

## Indication:

1.Marking:

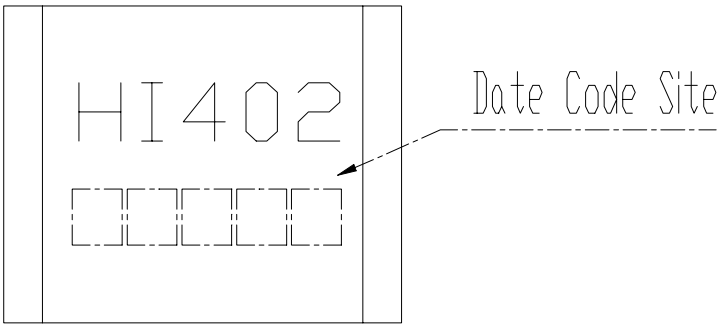


2.Date Code Explanation:

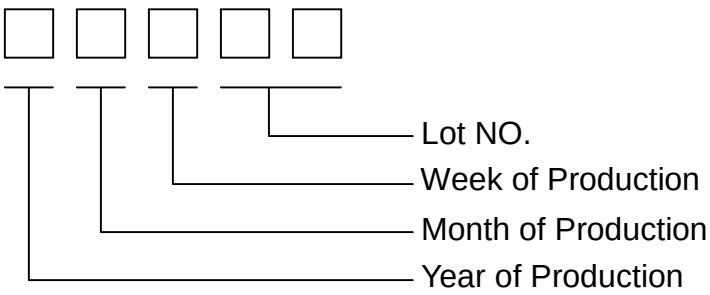


www.DataSheet4U.com

www.DataSheet4U.com

EVERLIGHT ELECTRONICS CO., LTD.



# Infrared Remote-control Receiver Module

MODEL NO : HI402

Year of Production:

| Symbol | Year |
|---|---|
| 0 | 2000 |
| 1 | 2001 |
| 2 | 2002 |
| 3 | 2003 |
| 4 | 2004 |
| 5 | 2005 |
| 6 | 2006 |
| 7 | 2007 |
| 8 | 2008 |
| 9 | 2009 |

Month of Production:

| Symbol | Month |
|---|---|
| 1 | 1 |
| 2 | 2 |
| 3 | 3 |
| : | : |
| : | : |
| : | : |
| 9 | 9 |
| A | 10 |
| B | 11 |
| C | 12 |

Week of Production:

| | | | | | | | | | | | | | | | | | | | | | | |
|---|---|---|---|---|---|---|---|---|---|---|---|---|---|---|---|---|---|---|---|---|---|---|
| Week | 1 | 2 | 3 | 4 | 5 | 6 | 7 | 8 | 9 | 10 | 11 | 12 | 13 | 14 | 15 | 16 | 17 | 18 | 19 | 20 | 21 | 22 |
| Symbol | A | B | C | D | E | F | G | H | I | J | K | L | M | N | O | P | Q | R | S | T | U | V |
| Week | 23 | 24 | 25 | 26 | 27 | 28 | 29 | 30 | 31 | 32 | 33 | 34 | 35 | 36 | 37 | 38 | 39 | 40 | 41 | 42 | 43 | 44 |
| Symbol | W | X | Y | Z | a | b | c | d | e | f | g | h | i | j | k | l | m | n | o | p | q | r |
| Week | 45 | 46 | 47 | 48 | 49 | 50 | 51 | 52 | 53 | | | | | | | | | | | | | |
| Symbol | s | t | u | v | w | x | y | z | 1 | | | | | | | | | | | | | |

Lot NO.:

| Symbol | Year |
|---|---|
| 00 | The first wafer |
| 01 | The second wafer |
| 02 | The third wafer |
| : | : |
| : | : |
| 97 | The 98 th wafer |
| 98 | The 99 th wafer |
| 99 | The 100 th wafer |

| Symbol | Month |
|---|---|
| AA | The 101 th wafer |
| : | : |
| AZ | The 126 th wafer |

| | |
|---|---|
| BA | The 127 th wafer |
| : | : |
| BZ | The 152 th wafer |

www.DataSheet4U.com

www.DataSheet4U.com

EVERLIGHT ELECTRONICS CO., LTD.



# Infrared Remote-control Receiver Module

MODEL NO : HI402

## Packing Specifications: (UNIT : mm)

1.Bag:

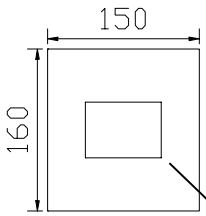


3.Carton:

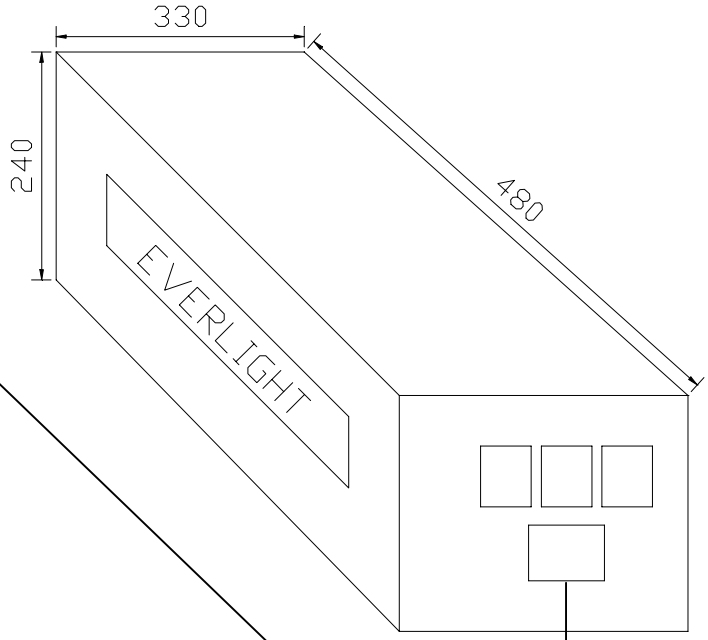


2.Box:

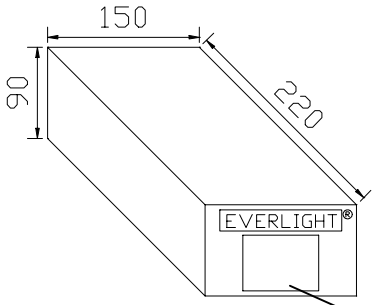


## Packing Quantity Specification:

1.1000Pcs/1Bag,10Bags/1Box
2.10Boxes/1Carton

## Label Specification:

CPN : Customer's Production Number
P/N : Production Number
QTY : Packing Quantity
CAT : Ranks
HUE : Reference
REF : Reference
LOT NO : Lot Number
MADE IN TAIWAN : Production Place

Label

www.DataSheet4U.com