Surface Mount Low Power Push-Pull Transformers

EPC3126G-X-LF

- Designed for use with Maxim Max 253/845
- PFA Teflon Insulation (Triple Insulated Wire)
- UL1446 Class H (Class 180) Insulating System
- Operating Temperature : -40°C to +85°C
- UL94-V0 Recognized Materials
- Up to 1 Watt

Electrical Parameters @ 25° C

PCA Part Number	Voltage (V)		Primary OCL (µH Typ.)	Turns Ratio (Pri. to Sec.)	ET (V-µSec.)	Duty Cycle (%)	Rectification (Half or Full Wave)
	V in	V out	@ 100 KHz, 0.1 Vrms	Pri. :Sec.	@ 350 KHz		Connections
EPC3126G-1-LF	5	15	793	1CT:2CT	11	75	Voltage Doubler
	3.3	5	793	1CT:2CT	11	75	† Output Center Tap
EPC3126G-2-LF	5	5	793	1CT:1.3CT	11	75	† Output Center Tap
	5	10	793	1CT:1.3CT	11	75	Voltage Doubler
EPC3126G-3-LF	5	10	793	1CT:2.6CT	11	77	† Output Center Tap
EPC3126G-4-LF	5	12	793	1CT:3CT	11	80	† Output Center Tap
	5	24	793	1CT:3CT	11	80	Voltage Doubler
EPC3126G-5-LF	3.3	5	793	1CT:1CT	11	75	Voltage Doubler
EPC3126G-6-LF	5	5	793	1CT:0.6CT	11	83	Voltage Doubler
EPC3126G-7-LF	5	12	793	1CT:1.5CT	11	80	Voltage Doubler

• **Switching Frequency :** 250 KHz - 1 MHz • **Isolation :** 4500 Vrms (1 minute) • † **Connections :** Output Center Tap as Common/Return •

Notes :	EPC3126G-X-LF
1. Assembly Process (Solder Composition)	Hot Dipped Sn
2. Peak Solder Rating	260°C
3. Moisture Sensitive Levels (MSL)	4 (72 Hours, ≤30°C/60%RH)
4. Weight	1.2 grams
5. Packaging Information (Tube)	55 pcs / tube
(Tape & Reel)	500 pieces/13" reel

Schematic

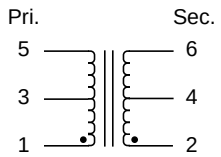

Package

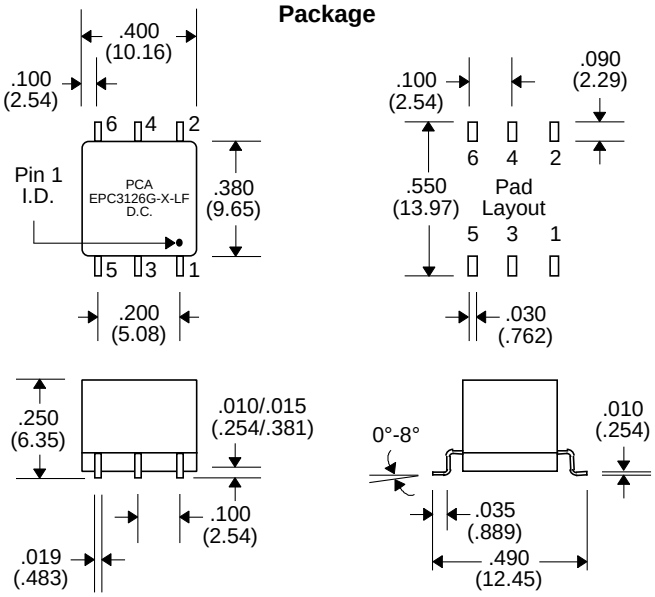

Application

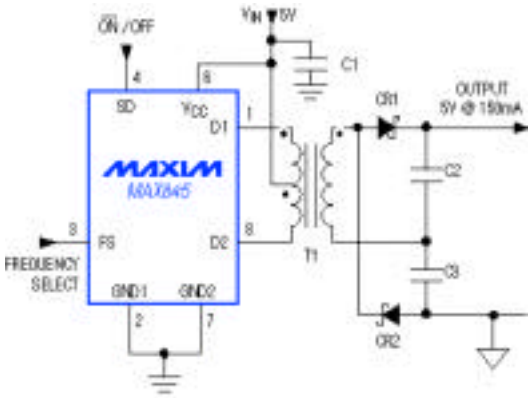

Unless Otherwise Specified Dimensions are in Inches /mm ± .010 /.25

PCA ELECTRONICS, INC.
16799 SCHOENBORN ST.
NORTH HILLS, CA 91343

Product performance is limited to specified parameters. Data is subject to change without prior notice.

CSC3126G-X-LF Rev. 3 7/16/08 JDG

TEL: (818) 892-0761
FAX: (818) 894-5791
http://www.pca.com