RE12864-004

液晶之友 电话：020-33819057
Http://www.lcdfriends.com

OKAYA

RE12864-004

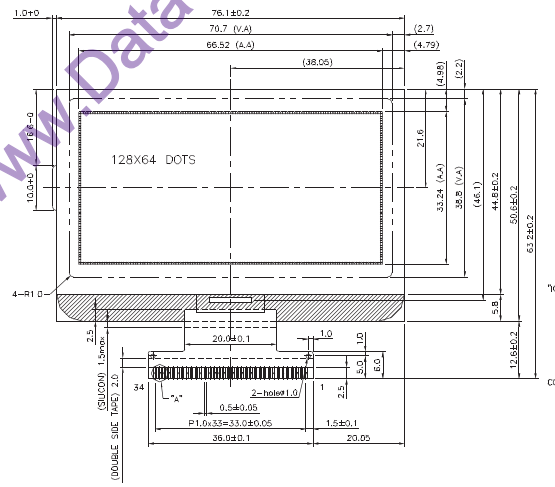

RE12864-004-C1

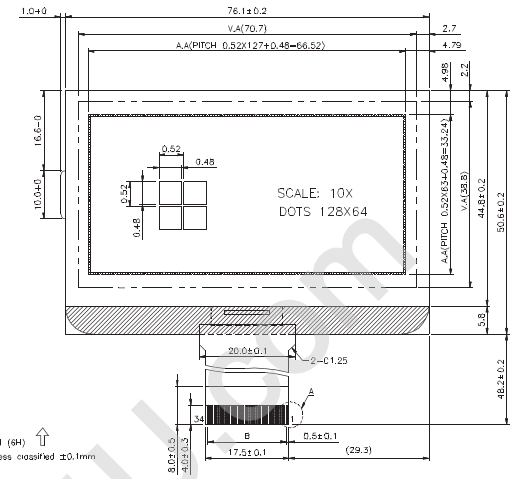

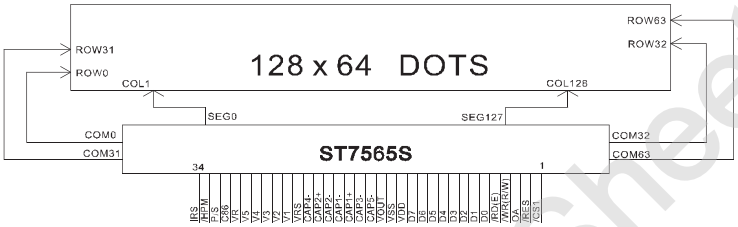

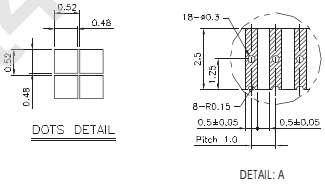

Features:

- Resolution: 128S*64C Dots
- Duty ratio:1/64
- LCD option: STN, FSTN
- Backlight option(H2/H1mm): None(-/1.9), LED(6.5/9.7)
- Controller IC:ST7565S

Optional:

- **RE**12864LRU-004-H-P1:With PCB, dimension same as **RG**12864-O
- **RE**12864URF-004-H for blue LED backlight version
- FPC cable for ZIF connector available

Pin Assignment

Pin no.	Symbol	Function
1	/CS1	Chip selection
2	/RES	Reset
3	A0	Selection to display or control data
4	WR(R/w)	Read/write selection
5	RD(E)	Read enable
6~10	D0~D7	Data bus
11	VDD	Power supply
12~18	VSS	Ground
19	VOUT	DC/DC converter
20	CAP	Capacitor selection to DC/DC voltage
21	VRS	Power supply for LCD voltage regulator
22~29	V1~V5	Multi-level power supply for LCD
30	VR	Contrast adjust
31	C86	Switch to 6800 or 8080 MPU interface
32	P/S	Selection to parallel/serial data input
33	HPM	Power control terminal
34	IRS	Selection to voltage

Absolute Maximum Rating

Item	Symbol	Condition	Min.	Max.	Units
Supply for logic voltage	Vdd-Vss	25°C	-0.3	5.0	V
LCD driving supply voltage	Vdd-Vee	25°C	-4.0	-13.0	V
Input Voltage	Vin	25°C	-0.3	Vdd+0.3	V

Electrical Characteristics

Item	Symbol	Condition	Min.		Typical		Max.		Units
Power supply voltage	Vdd-VSS	25°C	3.2		3.3		3.4		V
LCD operation voltage	Vop	Top	N	W	N	W	N	W	V
		-20°C	-	-	-	-	-	-	V
		0°C	-	-	-	-	-	-	V
		25°C	-	9.8	-	10.0	-	10.2	V
		50°C	-	-	-	-	-	-	V
		70°C	-	-	-	-	-	-	V
LCM current consumption (No B/L)	Idd	Vdd=3.3V	-		0.5		1.3		mA
Backlight current consumption	LED/Y.G	V B/L=4.2V	-		80		-		mA
	LED/Blue	V B/L=3.3V	-		80		-		mA

www.DataSheet4U.com