2-WAY RADIO PRODUCT ICs

AK2342B

CTCSS Encoder/Decoder with Scrambler

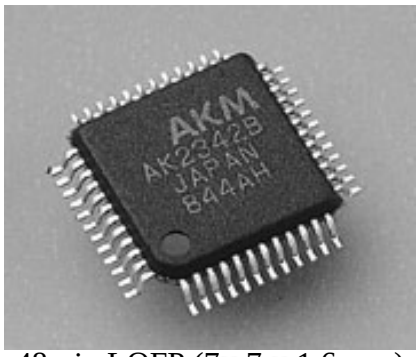

48-pin LQFP (7× 7 × 1.6 mm)

1. Encoder/Decoder for CTCSS (Continuous Tone Controlled Squelch System)
2. Programmable for up to 50 frequencies
3. Built-in high speed tone decoder (Typ. : 150ms@67Hz)
4. Integrated voice signal circuits for emphasis, limiter, splatter filter, etc.
5. Integrated scrambler for privacy
6. Integrated tone signal elimination filter
7. Can be linked with a DCS (Digitally Coded Squelch) system
8. Integrated oscillator circuit (3.6864 MHz) using a crystal oscillator
9. Low voltage operation: 1.8 V to 5.5 V
10. 48-pin LQFP package

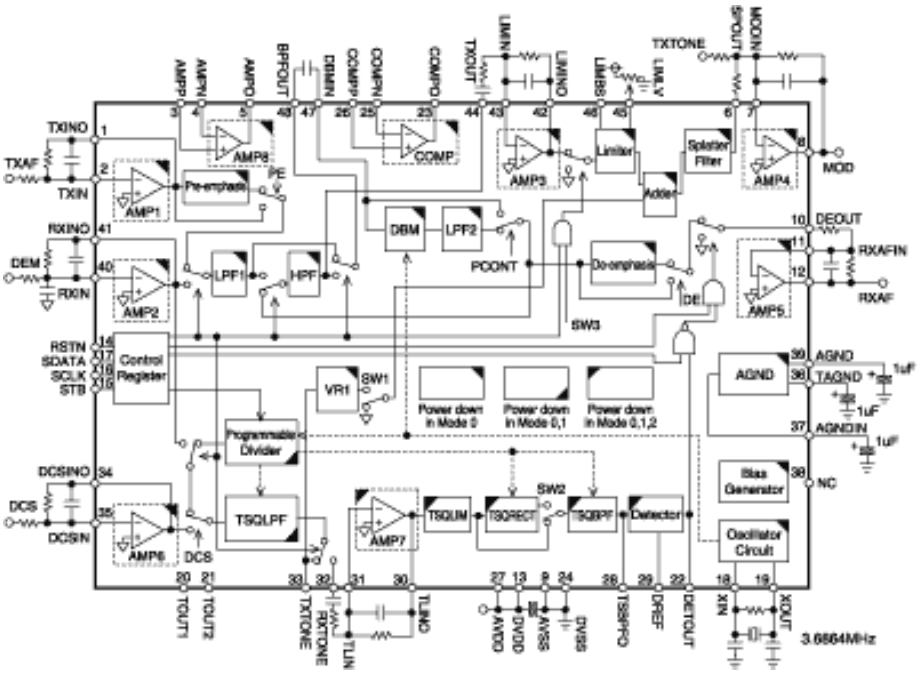

AK2342B BLOCK DIAGRAM