HB56UW272EJN-6B/7B

2,097,152-word × 72-bit High Density Dynamic RAM Module
168-pin JEDEC Standard Outline Unbufferd 8 byte DIMM

HITACHI

ADE-203-586A(Z)
Preliminary - Rev. 0.1
May. 23, 1996

Description

The HB56UW272EJN belongs to 8 Byte DIMM (Dual In-line Memory Module) family, and has been developed as an optimized main memory solution for 4 and 8 Byte processor applications.

The HB56UW272EJN is a 2M × 72 dynamic RAM module, mounted 9 pieces of 16-Mbit DRAM (HM51W17805BJ) sealed in SOJ package and 1 piece of serial EEPROM (24C02) for Presence Detect (PD). The HB56UW272EJN offers Extended Data Out (EDO) Page Mode as a high speed access mode. An outline of the HB56UW272EJN is 168-pin socket type package (dual lead out). Therefore, the HB56UW272EJN makes high density mounting possible without surface mount technology. The HB56UW272EJN provides common data inputs and outputs. Decoupling capacitors are mounted beneath each SOJ on the module board.

Features

- 168-pin socket type package (Dual lead out)
  — Lead pitch: 1.27 mm
- Single 3 V (±0.3%) supply
- High speed
  — Access time: t_{RAC} = 60/70 ns (max)
- Access time: t_{CAC} = 15/18 ns (max)
- Low power dissipation
  — Active mode: 3.9/3.6 W (max)
  — Standby mode (TTL): 65 mW (max)
  — Standby mode (CMOS): 32 mW (max)
- EDO page mode capability
- 2,048 refresh cycle: 32 ms
- 3 variations of refresh
  — $\overline{RAS}$-only refresh
  — $\overline{CAS}$-before-$\overline{RAS}$ refresh
  — Hidden refresh

Ordering Information

Type No.	Access time	Package	Contact pad
HB56UW272EJN-6B	60 ns	168-pin dual lead out socket type	Gold
HB56UW272EJN-7B	70 ns	168-pin dual lead out socket type	Gold

Pin Arrangement

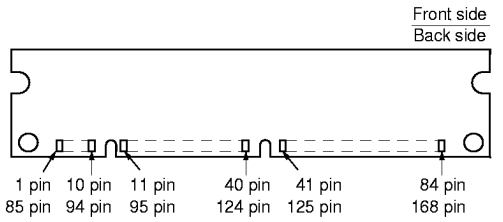

Pin Arrangement

Pin No.	Pin Name	Pin No.	Pin Name	Pin No.	Pin Name	Pin No.	Pin Name
1	V_{SS}	43	V_{SS}	85	V_{SS}	127	V_{SS}
2	DQ0	44	$\overline{OE2}$	86	DQ32	128	NC
3	DQ1	45	$\overline{RAS2}$	87	DQ33	129	NC
4	DQ2	46	$\overline{CAS2}$	88	DQ34	130	$\overline{CAS6}$
5	DQ3	47	$\overline{CAS3}$	89	DQ35	131	$\overline{CAS7}$
6	V_{CC}	48	$\overline{WE2}$	90	V_{CC}	132	NC
7	DQ4	49	V_{CC}	91	DQ36	133	V_{CC}
8	DQ5	50	NC	92	DQ37	134	NC
9	DQ6	51	NC	93	DQ38	135	NC
10	DQ7	52	CB2	94	DQ39	136	CB6
11	DQ8	53	CB3	95	DQ40	137	CB7
12	V_{SS}	54	V_{SS}	96	V_{SS}	138	V_{SS}
13	DQ9	55	DQ16	97	DQ41	139	DQ48
14	DQ10	56	DQ17	98	DQ42	140	DQ49
15	DQ11	57	DQ18	99	DQ43	141	DQ50
16	DQ12	58	DQ19	100	DQ44	142	DQ51
17	DQ13	59	V_{CC}	101	DQ45	143	V_{CC}
18	V_{CC}	60	DQ20	102	V_{CC}	144	DQ52
19	DQ14	61	NC	103	DQ46	145	NC
20	DQ15	62	NC	104	DQ47	146	NC
21	CB0	63	NC	105	CB4	147	NC
22	CB1	64	V_{SS}	106	CB5	148	V_{SS}
23	V_{SS}	65	DQ21	107	V_{SS}	149	DQ53
24	NC	66	DQ22	108	NC	150	DQ54
25	NC	67	DQ23	109	NC	151	DQ55
26	V_{CC}	68	V_{SS}	110	V_{CC}	152	V_{SS}
27	$\overline{WE0}$	69	DQ24	111	NC	153	DQ56
28	$\overline{CAS0}$	70	DQ25	112	$\overline{CAS4}$	154	DQ57
29	$\overline{CAS1}$	71	DQ26	113	$\overline{CAS5}$	155	DQ58
30	$\overline{RAS0}$	72	DQ27	114	NC	156	DQ59
31	$\overline{OE0}$	73	V_{CC}	115	NC	157	V_{CC}
32	V_{SS}	74	DQ28	116	V_{SS}	158	DQ60
33	A0	75	DQ29	117	A1	159	DQ61
34	A2	76	DQ30	118	A3	160	DQ62
35	A4	77	DQ31	119	A5	161	DQ63
36	A6	78	V_{SS}	120	A7	162	V_{SS}
37	A8	79	NC	121	A9	163	NC
38	A10	80	NC	122	NC	164	NC
39	NC	81	NC	123	NC	165	SA0
40	V_{CC}	82	SDA	124	V_{CC}	166	SA1
41	V_{CC}	83	SCL	125	NC	167	SA2
42	NC	84	V_{CC}	126	NC	168	V_{CC}

Pin Description

Pin Name	Function
A0 to A10	Address Input: A0 to A10 Row Address: A0 to A10 Column Address: A0 to A9 Refresh Address: A0 to A10
DQ0 to DQ63	Data-in/Data-out
$\overline{RAS0}$, $\overline{RAS2}$	Row Address Strobe
$\overline{CAS0}$ to $\overline{CAS7}$	Column Address Strobe
$\overline{WE0}$, $\overline{WE2}$	Read/Write Enable
$\overline{OE0}$, $\overline{OE2}$	Output Enable
SDA	Serial Data for Out (Bit0 to 7)
SCL	Clock for Presence Detect
SA0 to SA2	Serial Address Input
CB0 to CB7	Check Bit
V_{CC}	Power Supply
V_{SS}	Ground
NC	Non Connection

Serial PD Matrix

Byte Number	Function Described	Bit7	Bit6	Bit5	Bit4	Bit3	Bit2	Bit1	Bit0	Note
0	Number Serial PD Bytes	0	0	0	0	1	1	0	1	13
1	Serial Memory	0	0	0	0	1	0	0	0	256 Byte
2	Fundamental Memory Type	0	0	0	0	0	0	1	0	EDO
3	Number of Rows	0	0	0	0	1	0	1	1	11
4	Number of Columns	0	0	0	0	1	0	1	0	10
5	Number of Banks	0	0	0	0	0	0	0	1	1
6	Data Width	0	1	0	0	1	0	0	0	72
7	Data Width (continued)	0	0	0	0	0	0	0	0	0 (+)
8	Voltage Interface	0	0	0	0	0	0	0	1	LVTTL
9	$\overline{RAS}$ Access Time 60 ns	0	0	1	1	1	1	0	0	
9	$\overline{RAS}$ Access Time 70 ns	0	1	0	0	0	1	1	0	
10	$\overline{CAS}$ Access Time 15 ns	0	0	0	0	1	1	1	1	
10	$\overline{CAS}$ Access Time 18 ns	0	0	0	1	0	0	1	0	
11	Error Detection/Corraction	0	0	0	0	0	0	1	0	ECC
12	Refresh Period	0	0	0	0	0	0	0	0	Normal (15.625 µs)

Note: Serial-PD Datas are not protected.
0: Serial Data, “driven to Low”
1: Serial Data, “driven to High”

Block Diagram

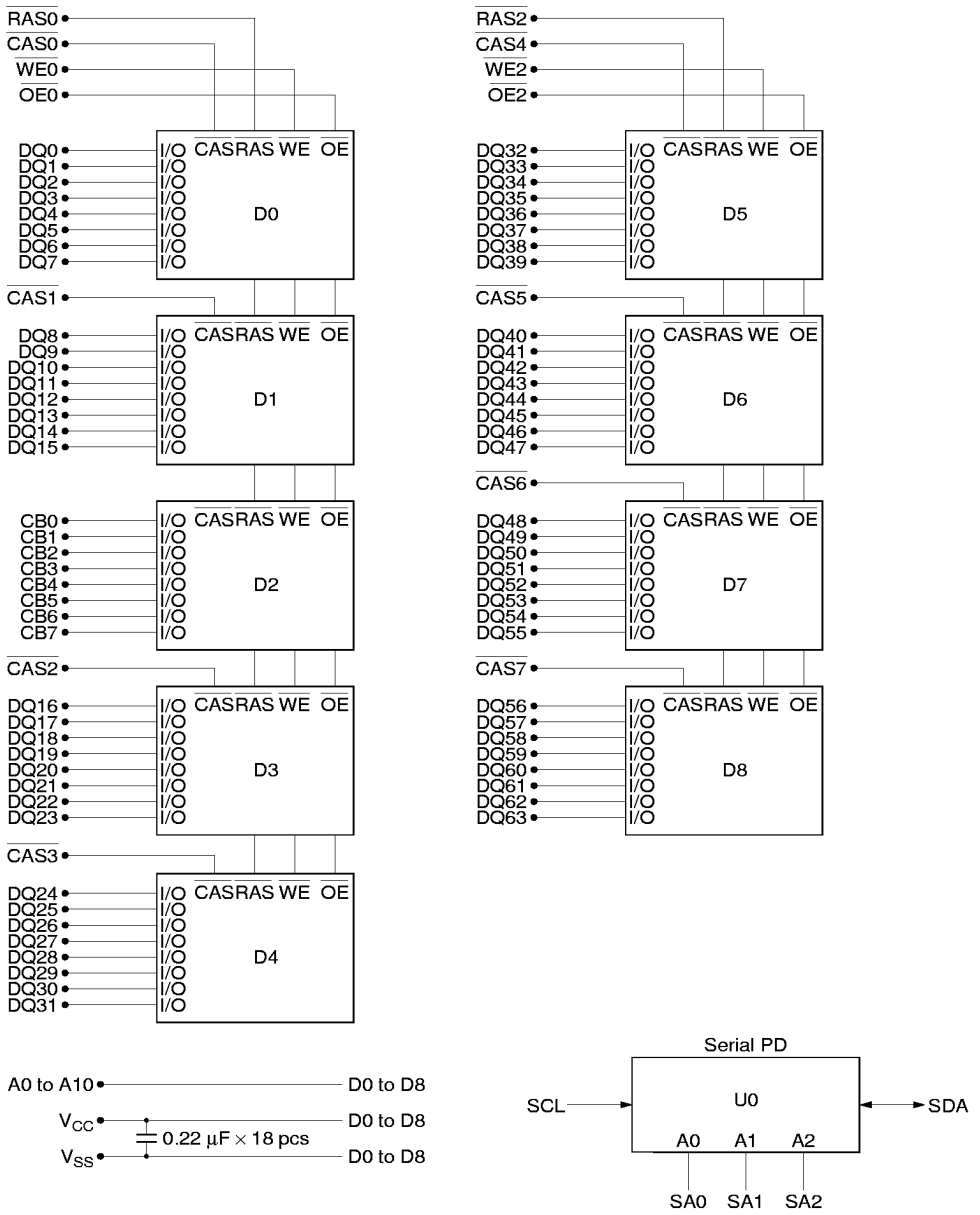

* D0 to D8 : HM51W17805
U0 : NM24C02LMM8 or X24C02M8

Note
1. The SDA pull-up resistor is required due to the open-drain/open-collecter output.
2. The SCL pull-up resistor is recommended because of the normal SCL line inactive "High" state.

Absolute Maximum Ratings

Parameter	Symbol	Value	Unit
Voltage on any pin relative to V_{SS}	V_T	–0.5 to +4.6	V
Supply voltage relative to V_{SS}	V_{CC}	–0.5 to +4.6	V
Short circuit output current	Iout	50	mA
Power dissipation	Pt	9	W
Operating temperature	Topr	0 to +70	°C
Storage temperature	Tstg	–55 to +125	°C

Recommended DC Operating Conditions (Ta = 0 to 70°C)

Parameter	Symbol	Min	Typ	Max	Unit	Note
Supply voltage	V_{SS}	0	0	0	V	
Supply voltage	V_{CC}	3.0	3.3	3.6	V	1
Input high voltage	V_{IH}	2.0	—	V_{CC} +0.3	V	1
Input low voltage	V_{IL}	–0.3	—	0.8	V	1

Note: 1. All voltage referenced to V_{SS}.

DC Characteristics (Ta = 0 to 70°C, V_{CC} = 3.3 V ± 0.3V, V_{SS} = 0 V)

Parameter	Symbol	60 ns Min	60 ns Max	70 ns Min	70 ns Max	Unit	Test condition	Note
Operating current	I_{CC1}	—	1080	—	990	mA	t_{RC} = min	1, 2
Standby current	I_{CC2}	—	18	—	18	mA	TTL interface $\overline{RAS}$, $\overline{CAS}$ = V_{IH} Dout = High-Z	
Standby current	I_{CC2}	—	9	—	9	mA	CMOS interface $\overline{RAS}$, $\overline{CAS}$ ≥ V_{CC} – 0.2 V Dout = High-Z	
$\overline{RAS}$-only refresh current	I_{CC3}	—	1080	—	990	mA	t_{RC} = min	2
Standby current	I_{CC5}	—	45	—	45	mA	$\overline{RAS}$ = V_{IH}, $\overline{CAS}$ = V_{IL} Dout = enable	1
$\overline{CAS}$-before-$\overline{RAS}$ refresh current	I_{CC6}	—	1080	—	990	mA	t_{RC} = min	
EDO page mode current	I_{CC7}	—	1080	—	990	mA	t_{HPC} = min	1, 3
Input leakage current	I_{LI}	–10	10	–10	10	µA	0 V ≤ Vin ≤ 4.6 V	
Output leakage current	I_{LO}	–10	10	–10	10	µA	0 V ≤ Vout ≤ 4.6 V Dout = disable	
Output high voltage	V_{OH}	2.4	V_{CC}	2.4	V_{CC}	V	High Iout = –2 mA	
Output low voltage	V_{OL}	0	0.4	0	0.4	V	Low Iout = 2 mA	

Notes: 1. I_{CC} depends on output load condition when the device is selected, I_{CC} max is specified at the output open condition.
2. Address can be changed once or less while $\overline{RAS}$ = V_{IL}.
3. Address can be changed once or less while $\overline{CAS}$ = V_{IH}.

Capacitance (Ta = 25°C, V_{CC} = 3.3 V ± 0.3V)

Parameter	Symbol	Typ	Max	Unit	Notes
Input capacitance (Address)	C_{I1}	—	65	pF	1
Input capacitance ($\overline{CAS}$)	C_{I2}	—	34	pF	1
Input capacitance ($\overline{RAS}$)	C_{I3}	—	55	pF	1
Input capacitance ($\overline{WE}$, $\overline{OE}$)	C_{I4}	—	55	pF	1
I/O capacitance (DQ)	$C_{I/O}$	—	20	pF	1, 2

Notes: 1. Capacitance measured with Boonton Meter or effective capacitance measuring method.
2. $\overline{CAS}$ = V_{IH} to disable Dout.

AC Characteristics (Ta = 0 to 70°C, V_{CC} = 3.3 V ± 0.3V, V_{SS} = 0 V)[*1, *2, *18, *19]

Test Conditions

- Input rise and fall times: 2 ns
- Input levels: V_{IL} = 0 V, V_{IH} = 3.0 V
- Input timing reference levels: 0.8 V, 2.0 V
- Output timing reference levels: 0.8 V, 2.0 V
- Output load: 1 TTL gate + C_L (100 pF) (Including scope and jig)

Read, Write, Read-Modify-Write and Refresh Cycles (Common parameters)

		60 ns		70 ns			
Parameter	**Symbol**	**Min**	**Max**	**Min**	**Max**	**Unit**	**Notes**
Random read or write cycle time	t_{RC}	104	—	124	—	ns	
$\overline{RAS}$ precharge time	t_{RP}	40	—	50	—	ns	
$\overline{CAS}$ precharge time	t_{CP}	10	—	13	—	ns	
$\overline{RAS}$ pulse width	t_{RAS}	60	10000	70	10000	ns	
$\overline{CAS}$ pulse width	t_{CAS}	10	10000	13	10000	ns	
Row address setup time	t_{ASR}	0	—	0	—	ns	
Row address hold time	t_{RAH}	10	—	10	—	ns	
Column address setup time	t_{ASC}	0	—	0	—	ns	
Column address hold time	t_{CAH}	10	—	13	—	ns	
$\overline{RAS}$ to $\overline{CAS}$ delay time	t_{RCD}	20	45	20	52	ns	3
$\overline{RAS}$ to column address delay time	t_{RAD}	15	30	15	35	ns	4
$\overline{RAS}$ hold time	t_{RSH}	15	—	18	—	ns	
$\overline{CAS}$ hold time	t_{CSH}	48	—	58	—	ns	
$\overline{CAS}$ to $\overline{RAS}$ precharge time	t_{CRP}	5	—	5	—	ns	
$\overline{OE}$ to Din delay time	t_{OED}	15	—	18	—	ns	5
$\overline{OE}$ delay time from Din	t_{DZO}	0	—	0	—	ns	6
$\overline{CAS}$ delay time from Din	t_{DZC}	0	—	0	—	ns	6
Transition time (rise and fall)	t_T	2	50	2	50	ns	7
Refresh period (1,024 cycle)	t_{REF}	—	32	—	32	ms	

Read Cycle

Parameter	Symbol	60 ns Min	60 ns Max	70 ns Min	70 ns Max	Unit	Notes
Access time from $\overline{RAS}$	t_{RAC}	—	60	—	70	ns	8, 9
Access time from $\overline{CAS}$	t_{CAC}	—	15	—	18	ns	9, 10, 17
Access time from address	t_{AA}	—	30	—	35	ns	9, 11, 17
Access time from $\overline{OE}$	t_{OEA}	—	15	—	18	ns	9, 21
Read command setup time	t_{RCS}	0	—	0	—	ns	
Read command hold time to $\overline{CAS}$	t_{RCH}	0	—	0	—	ns	12
Read command hold time from $\overline{RAS}$	t_{RCHR}	60	—	70	—	ns	
Read command hold time to $\overline{RAS}$	t_{RRH}	0	—	0	—	ns	12
Column address to $\overline{RAS}$ lead time	t_{RAL}	30	—	35	—	ns	
Column address to $\overline{CAS}$ lead time	t_{CAL}	18	—	23	—	ns	
$\overline{CAS}$ to output in low-Z	t_{CLZ}	0	—	0	—	ns	
Output data hold time	t_{OH}	3	—	3	—	ns	
Output data hold time from $\overline{OE}$	t_{OHO}	3	—	3	—	ns	
Output buffer turn-off time	t_{OFF}	—	15	—	15	ns	13
Output buffer turn-off to $\overline{OE}$	t_{OEZ}	—	15	—	15	ns	13
$\overline{CAS}$ to Din delay time	t_{CDD}	15	—	18	—	ns	5
Output data hold time from $\overline{RAS}$	t_{OHR}	3	—	3	—	ns	
Output buffer turn-off time to $\overline{RAS}$	t_{OFR}	—	15	—	15	ns	
Output buffer turn-off to $\overline{WE}$	t_{WEZ}	—	15	—	15	ns	
$\overline{WE}$ to Din delay time	t_{WED}	15	—	18	—	ns	
$\overline{RAS}$ to Din delay time	t_{RDD}	15	—	18	—	ns	

Write Cycle

Parameter	Symbol	60 ns Min	60 ns Max	70 ns Min	70 ns Max	Unit	Notes
Write command setup time	t_{WCS}	0	—	0	—	ns	14
Write command hold time	t_{WCH}	10	—	13	—	ns	
Write command pulse width	t_{WP}	10	—	10	—	ns	
Write command to $\overline{RAS}$ lead time	t_{RWL}	10	—	13	—	ns	
Write command to $\overline{CAS}$ lead time	t_{CWL}	10	—	13	—	ns	
Data-in setup time	t_{DS}	0	—	0	—	ns	15
Data-in hold time	t_{DH}	10	—	13	—	ns	15

Read-Modify-Write Cycle

Parameter	Symbol	60 ns Min	60 ns Max	70 ns Min	70 ns Max	Unit	Notes
Read-modify-write cycle time	t_{RWC}	149	—	175	—	ns	
$\overline{RAS}$ to $\overline{WE}$ delay time	t_{RWD}	82	—	95	—	ns	14
$\overline{CAS}$ to $\overline{WE}$ delay time	t_{CWD}	37	—	43	—	ns	14
Column address to $\overline{WE}$ delay time	t_{AWD}	52	—	60	—	ns	14
$\overline{OE}$ hold time from $\overline{WE}$	t_{OEH}	15	—	18	—	ns	

Refresh Cycle

Parameter	Symbol	60 ns Min	60 ns Max	70 ns Min	70 ns Max	Unit	Notes
$\overline{CAS}$ setup time (CBR refresh cycle)	t_{CSR}	5	—	5	—	ns	
$\overline{CAS}$ hold time (CBR refresh cycle)	t_{CHR}	10	—	10	—	ns	
$\overline{WE}$ setup time (CBR refresh cycle)	t_{WRP}	0	—	0	—	ns	
$\overline{WE}$ hold time (CBR refresh cycle)	t_{WRH}	10	—	10	—	ns	
$\overline{RAS}$ precharge to $\overline{CAS}$ hold time	t_{RPC}	0	—	0	—	ns	

EDO Page Mode Cycle

Parameter	Symbol	60 ns Min	60 ns Max	70 ns Min	70 ns Max	Unit	Notes
EDO page mode cycle time	t_{HPC}	25	—	30	—	ns	20
EDO page mode $\overline{RAS}$ pulse width	t_{RASP}	—	100000	—	100000	ns	16
Access time from $\overline{CAS}$ precharge	t_{CPA}	—	35	—	40	ns	9, 17
$\overline{RAS}$ hold time from $\overline{CAS}$ precharge	t_{CPRH}	35	—	40	—	ns	
Output data hold time from $\overline{CAS}$ low	t_{DOH}	3	—	3	—	ns	9, 17
$\overline{CAS}$ hold time refferd $\overline{OE}$	t_{COL}	10	—	13	—	ns	
$\overline{CAS}$ to $\overline{OE}$ setup time	t_{COP}	5	—	5	—	ns	
Reas command hold time from $\overline{CAS}$ precharge	t_{RCHC}	35	—	40	—	ns	

EDO Page Mode Read-Modify-Write Cycle

Parameter	Symbol	60 ns Min	60 ns Max	70 ns Min	70 ns Max	Unit	Notes
EDO page mode read-modify-write cycle time	t_{HPRWC}	79	—	90	—	ns	
$\overline{WE}$ delay time from $\overline{CAS}$ precharge	t_{CPW}	54	—	62	—	ns	14

Notes:
1. AC measurements assume t_T = 2 ns.
2. An initial pause of 200 μs is required after power up followed by a minimum of eight initialization cycles (any combination of cycles containing $\overline{RAS}$-only refresh cycle or $\overline{CAS}$-before-$\overline{RAS}$ refresh).
3. Operation with the t_{RCD} (max) limit insures that t_{RAC} (max) can be met, t_{RCD} (max) is specified as a reference point only; if $t_{RCD} \geq t_{RAD}$ (max) + t_{AA} (max) - t_{CAC} (max), then access time is controlled exclusively by t_{CAC}.
4. Operation with the t_{RAD} (max) limit insures that t_{RAC} (max) can be met, t_{RAD} (max) is specified as a reference point only; if t_{RAD} is greater than the specified t_{RAD} (max) limit, then access time is controlled exclusively by t_{AA}.
5. Either t_{OED} or t_{CDD} must be satisfied.
6. Either t_{DZO} or t_{DZC} must be satisfied.
7. V_{IH} (min) and V_{IL} (max) are reference levels for measuring timing of input signals. Also, transition times are measured between V_{IH} (min) and V_{IL} (max).
8. Assumes that $t_{RCD} \leq t_{RCD}$ (max) and $t_{RAD} \leq t_{RAD}$ (max). If t_{RCD} or t_{RAD} is greater than the maximum recommended value shown in this table, t_{RAC} exceeds the value shown.
9. Measured with a load circuit equivalent to 1TTL loads and 100 pF.
10. Assumes that $t_{RCD} \geq t_{RCD}$ (max) and $t_{RAD} \leq t_{RAD}$ (max).
11. Assumes that $t_{RCD} \leq t_{RCD}$ (max) and $t_{RAD} \geq t_{RAD}$ (max).
12. Either t_{RCH} or t_{RRH} must be satisfied for a read cycles.
13. t_{OFF} (max) and t_{OEZ} (max) is define the time at which the outputs achieve the open circuit condition and are not referred to output voltage levels.
14. t_{WCS}, t_{RWD}, t_{CWD}, t_{CPW} and t_{AWD} are not restrictive operating parameters. They are included in the data sheet as electrical characteristics only; if $t_{WCS} \geq t_{WCS}$ (min), the cycle is an early write cycle and the data out pin will remain open circuit (high impedance) throughout the entire cycle; if $t_{RWD} \geq t_{RWD}$ (min), $t_{CWD} \geq t_{CWD}$ (min), and $t_{AWD} \geq t_{AWD}$ (min), or $t_{CWD} \geq t_{CWD}$ (min), $t_{AWD} \geq t_{AWD}$ (min) and $t_{CPW} \geq t_{CPW}$ (min), the cycle is a read-modify-write and the data output will contain data read from the selected cell; if neither of the above sets of conditions is satisfied, the condition of the data out (at access time) is indeterminate.
15. These parameters are referred to $\overline{CAS}$ leading edge in early write cycles and to $\overline{WE}$ leading edge in delayed write or read-modify-write cycles.
16. t_{RASP} defines $\overline{RAS}$ pulse width in EDO page mode cycles.
17. Access time is determined by the longest among t_{AA}, t_{CAC} or t_{CPA}.
18. In delayed write or read-modify-write cycles, $\overline{OE}$ must disable output buffer prior to applying data to the device. After $\overline{RAS}$ is reset, if $t_{OEH} \geq t_{CWL}$, the DQ pin will remain open circuit (high impedance); $t_{OEH} \leq t_{CWL}$, invalid data will be out at each DQ.
19. All the V_{CC} and V_{SS} pins shall be supplied with the same voltages.
20. t_{HPC} (min) can be achieved during a series of EDO page mode write cycles or EDO page mode read cycles. If both write and read operation are mixed in a EDO page mode $\overline{RAS}$ cycle (EDO page mode mix cycle (1), (2)), minimum value of $\overline{CAS}$ cycle (t_{CAS} + t_{CP} + 2t_T) becomes greater than the specified t_{HPC} (min) value. The value of $\overline{CAS}$ cycle time of mixed EDO page mode is shown in EDO page mode mix cycle (1) and (2).
21. When output buffers are enabled once, sustain the low impedance state until valid data is obtained. When output buffer is turned on and off within a very short time, generally causes large V_{CC} / V_{SS} line noise, which causes to degrade V_{IH} min / V_{IL} max level.

Timing Waveforms

Notes: //////: H or L (H: V_{IH} (min) ≤ V_{IN} ≤ V_{IH} (max), L: V_{IL} (min) ≤ V_{IN} ≤ V_{IL} (max))
XXX: Invalid Dout

Read Cycle

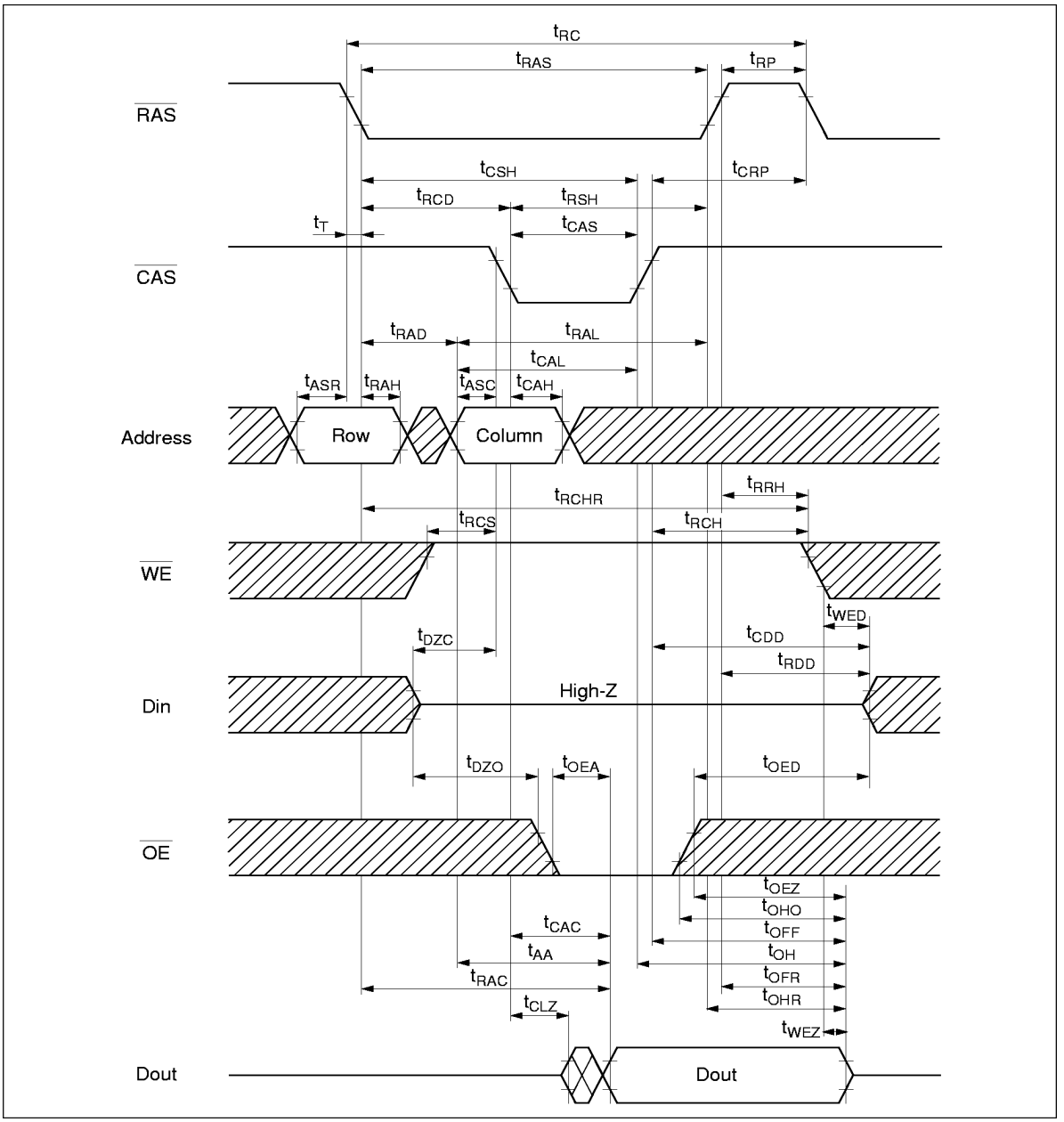

Early Write Cycle

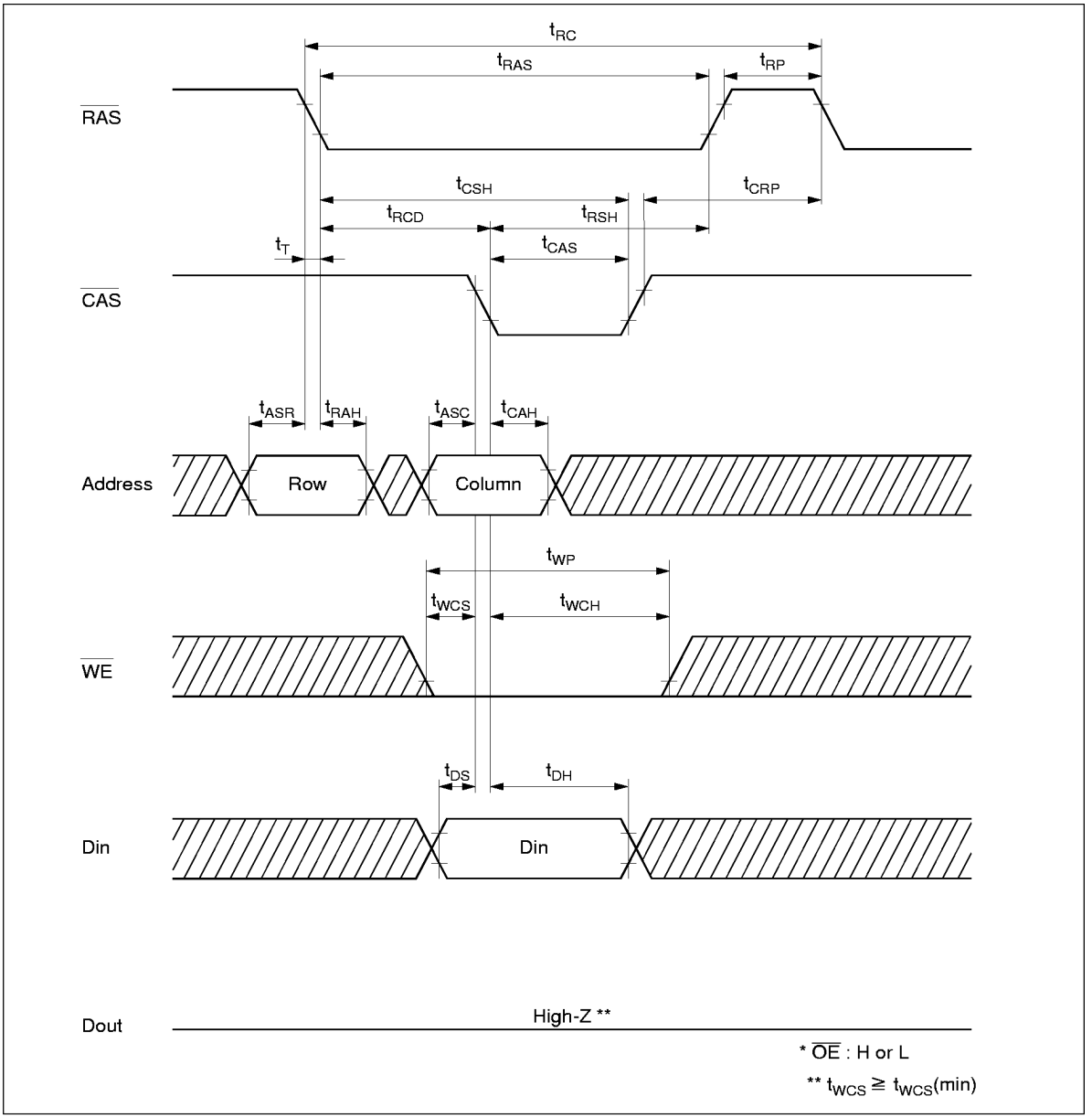

Delayd Write Cycle

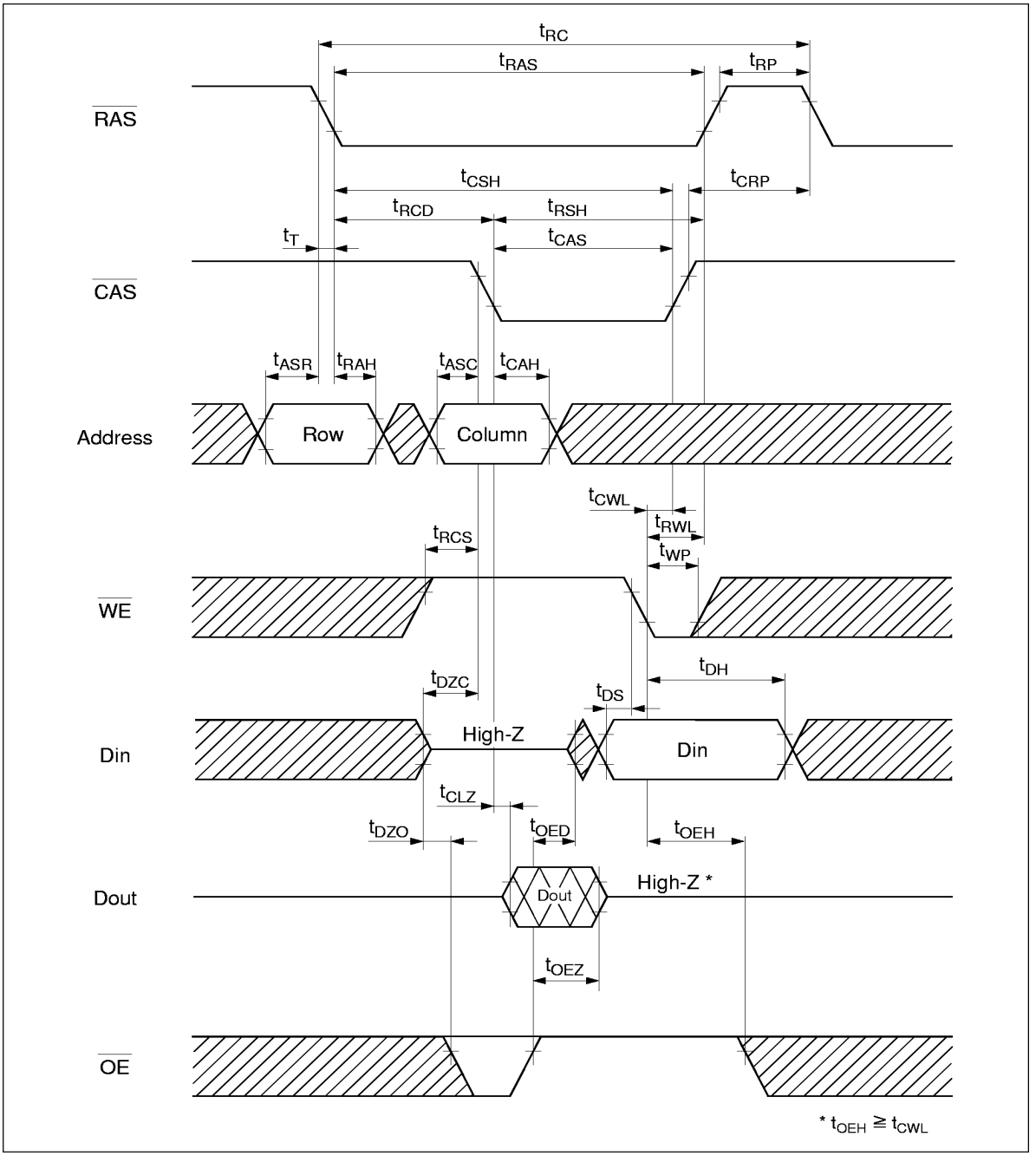

Read-Modify-Write Cycle

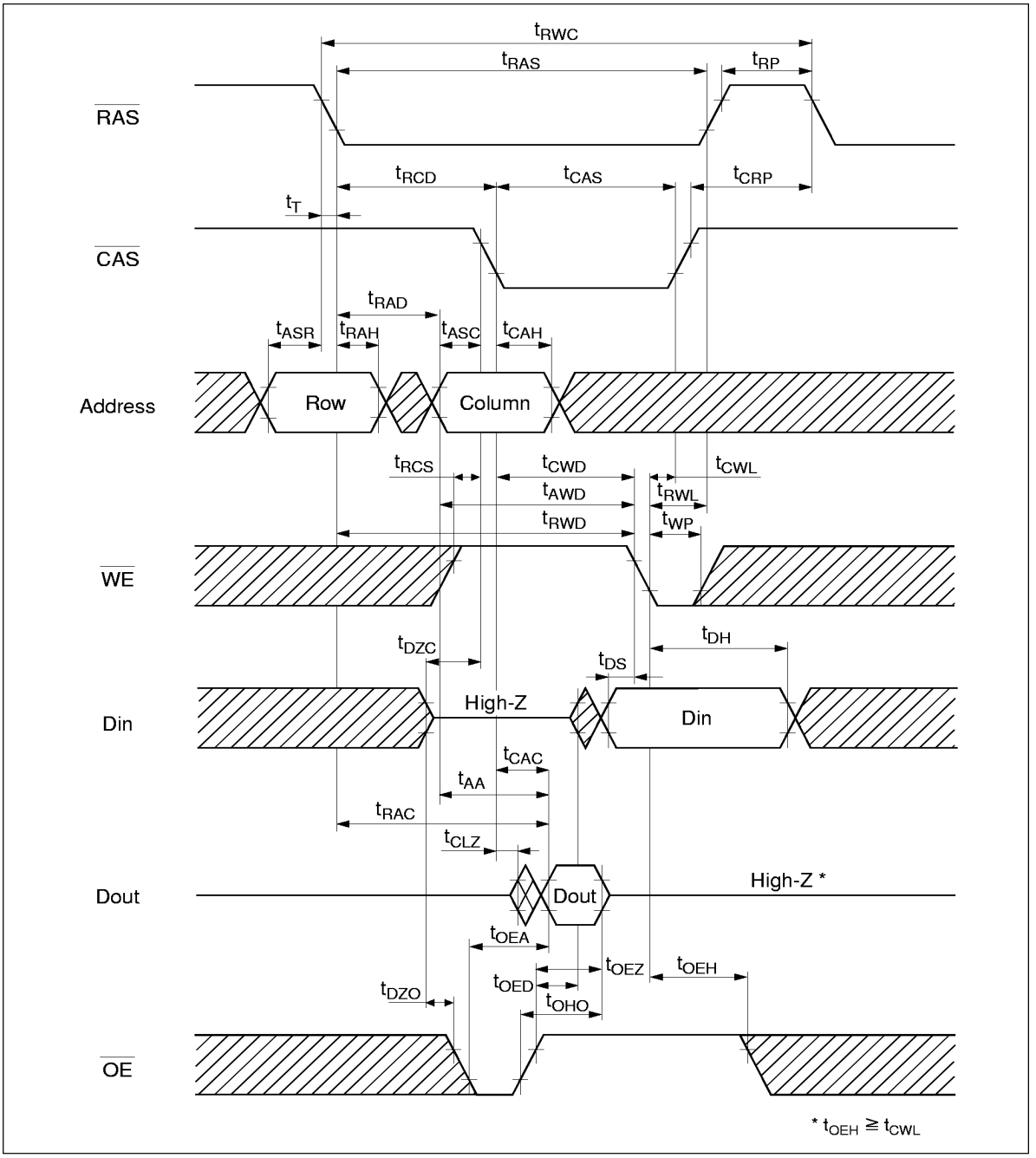

$\overline{RAS}$-Only Refresh Cycle

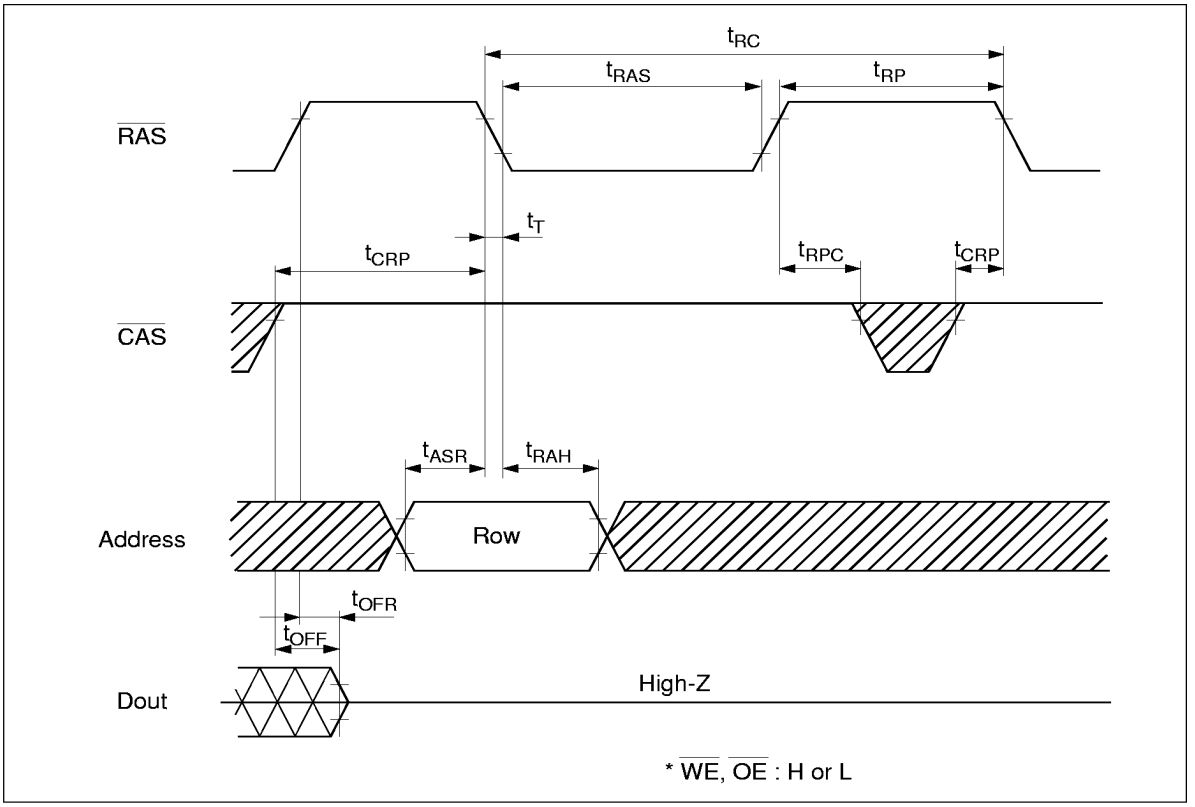

$\overline{CAS}$-Before-$\overline{RAS}$ Refresh Cycle

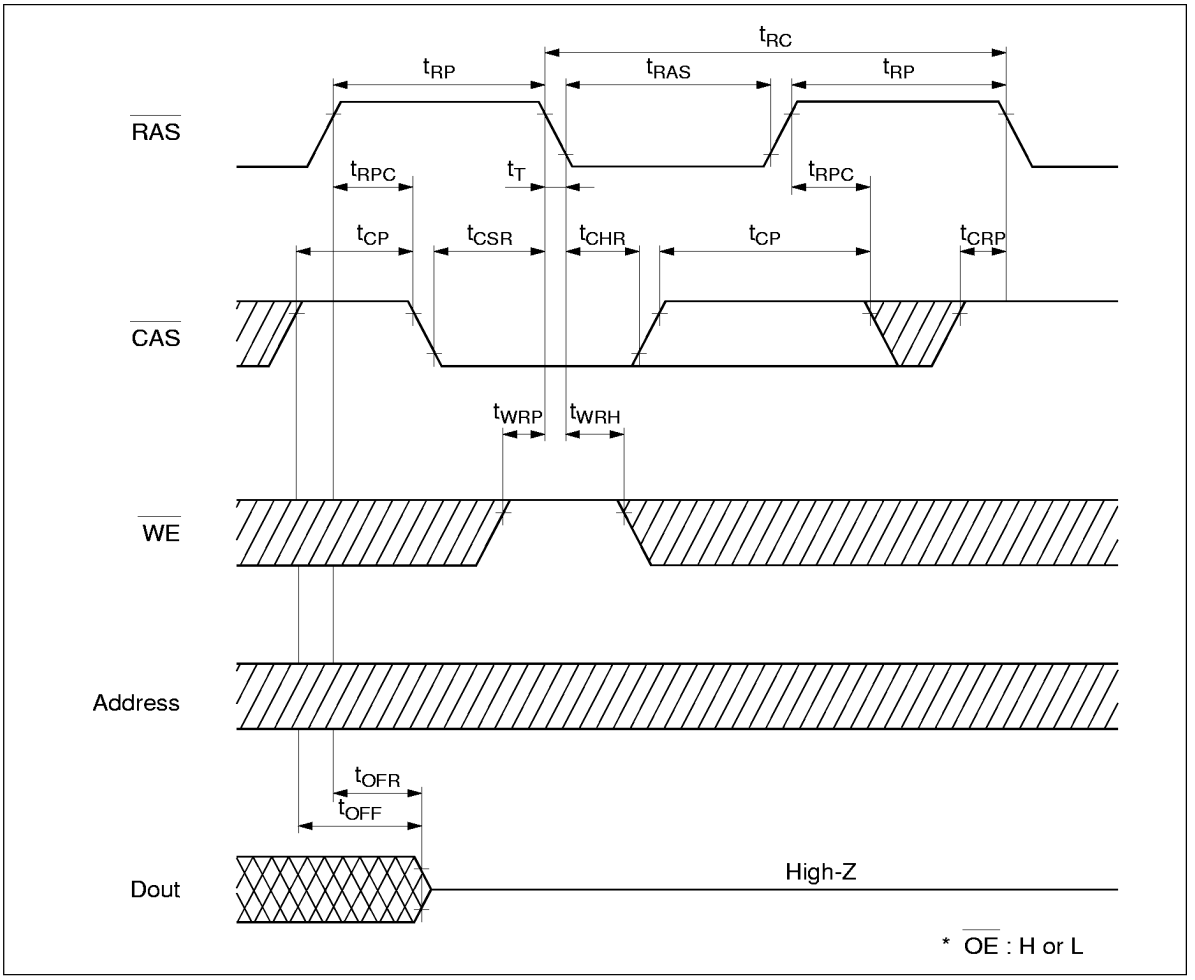

Hidden Refresh Cycle

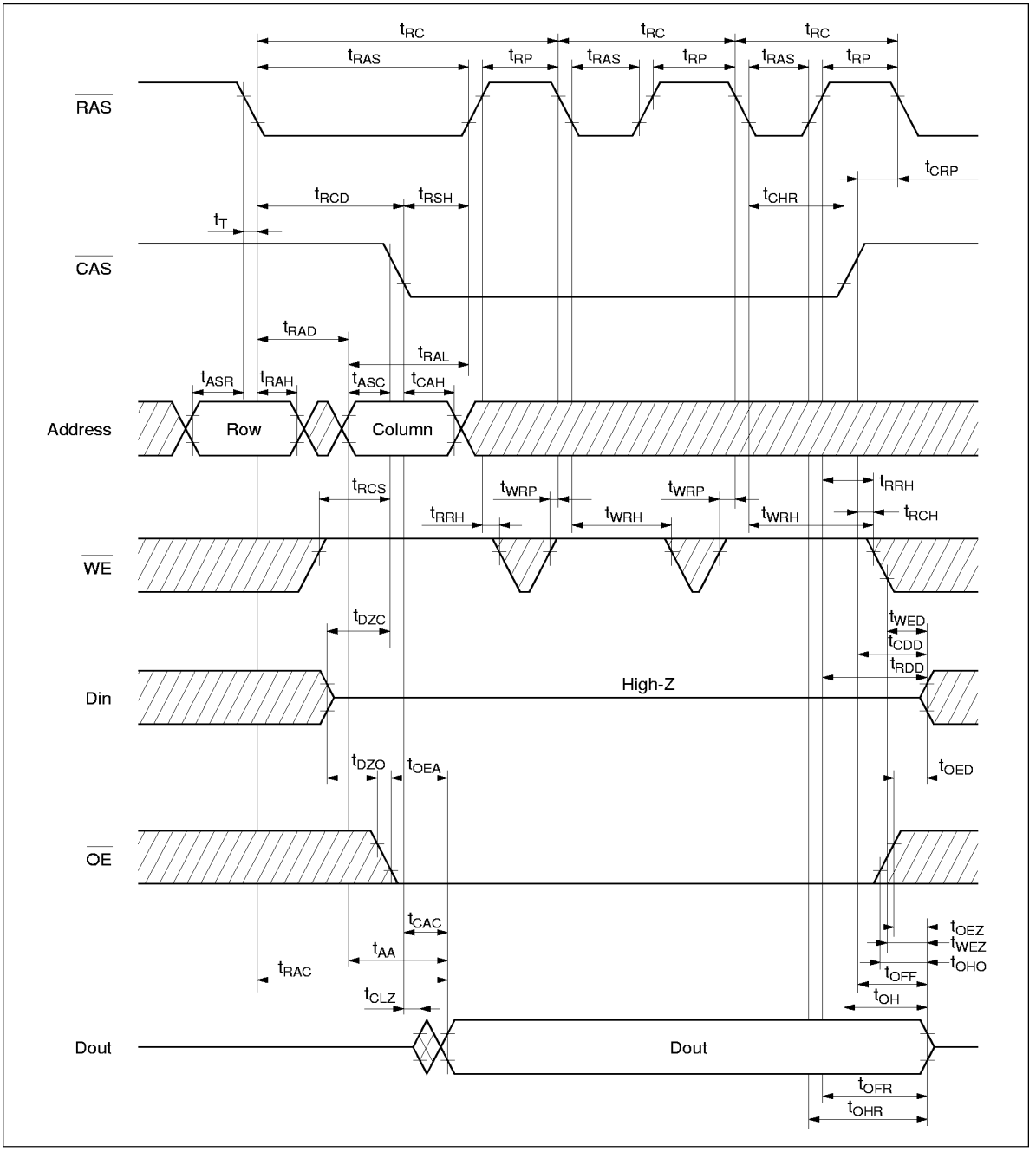

EDO Page Mode Read Cycle

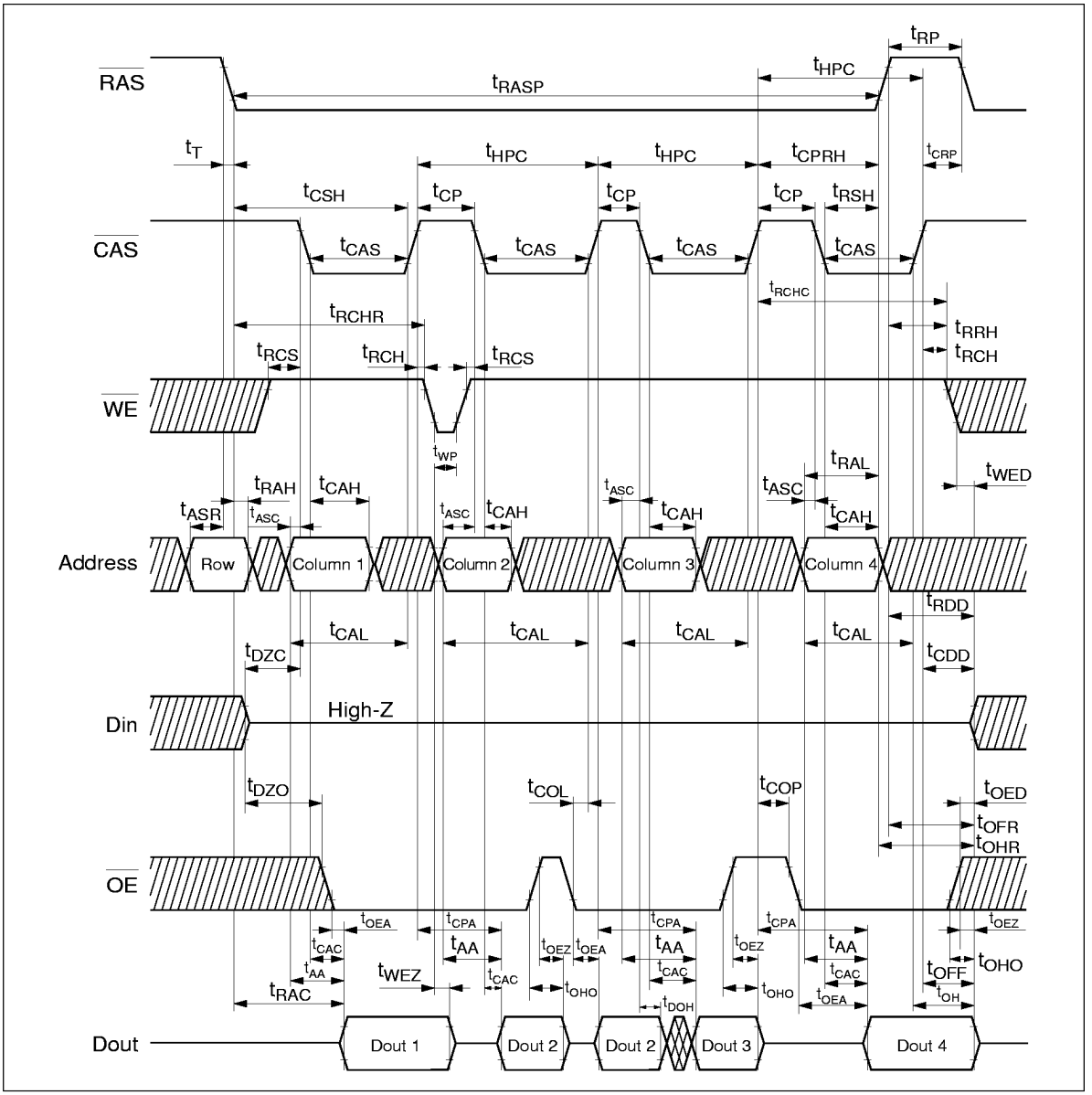

EDO Page Mode Eary Write Cycle

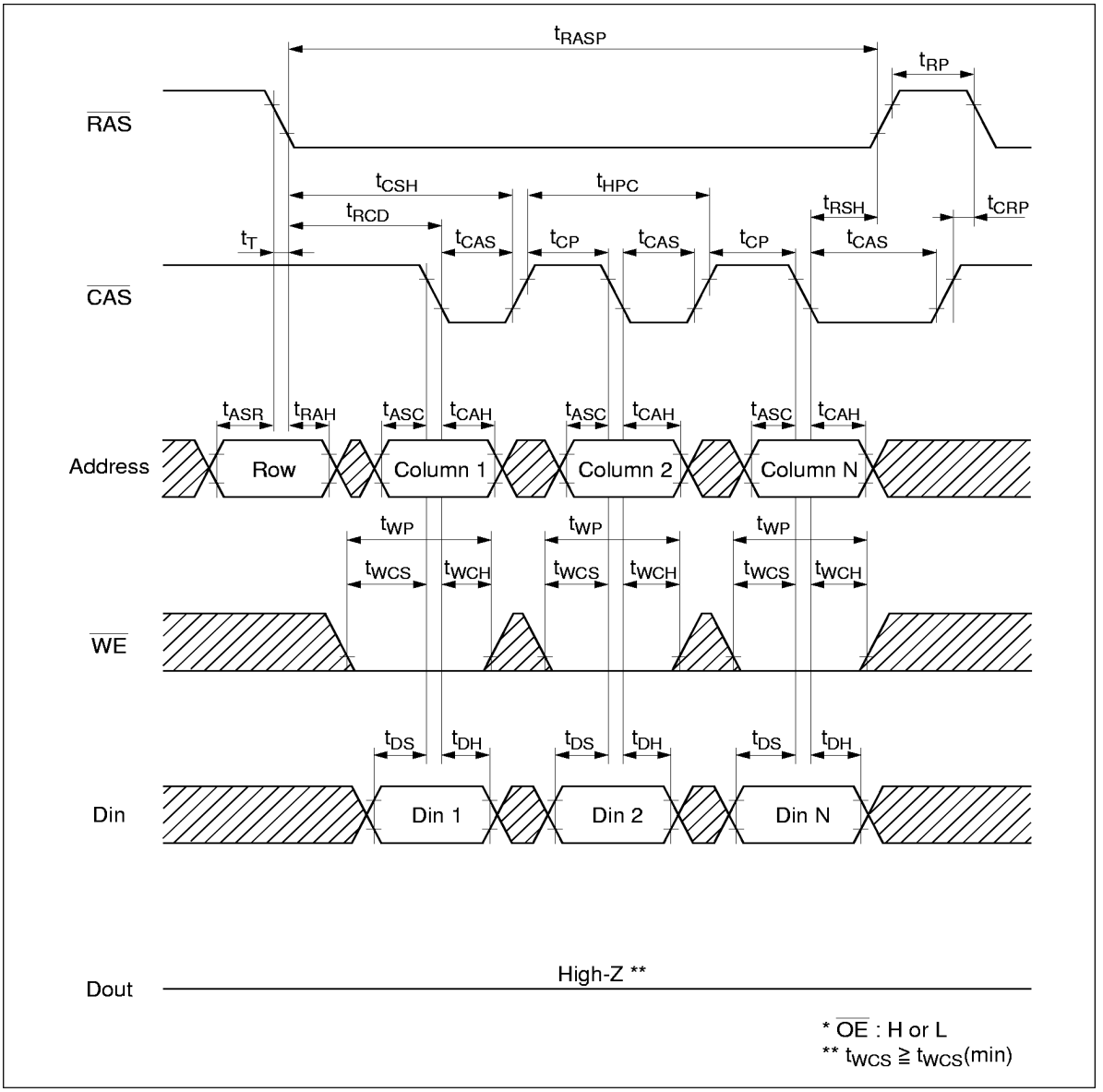

EDO Page Mode Delayed Write Cycle

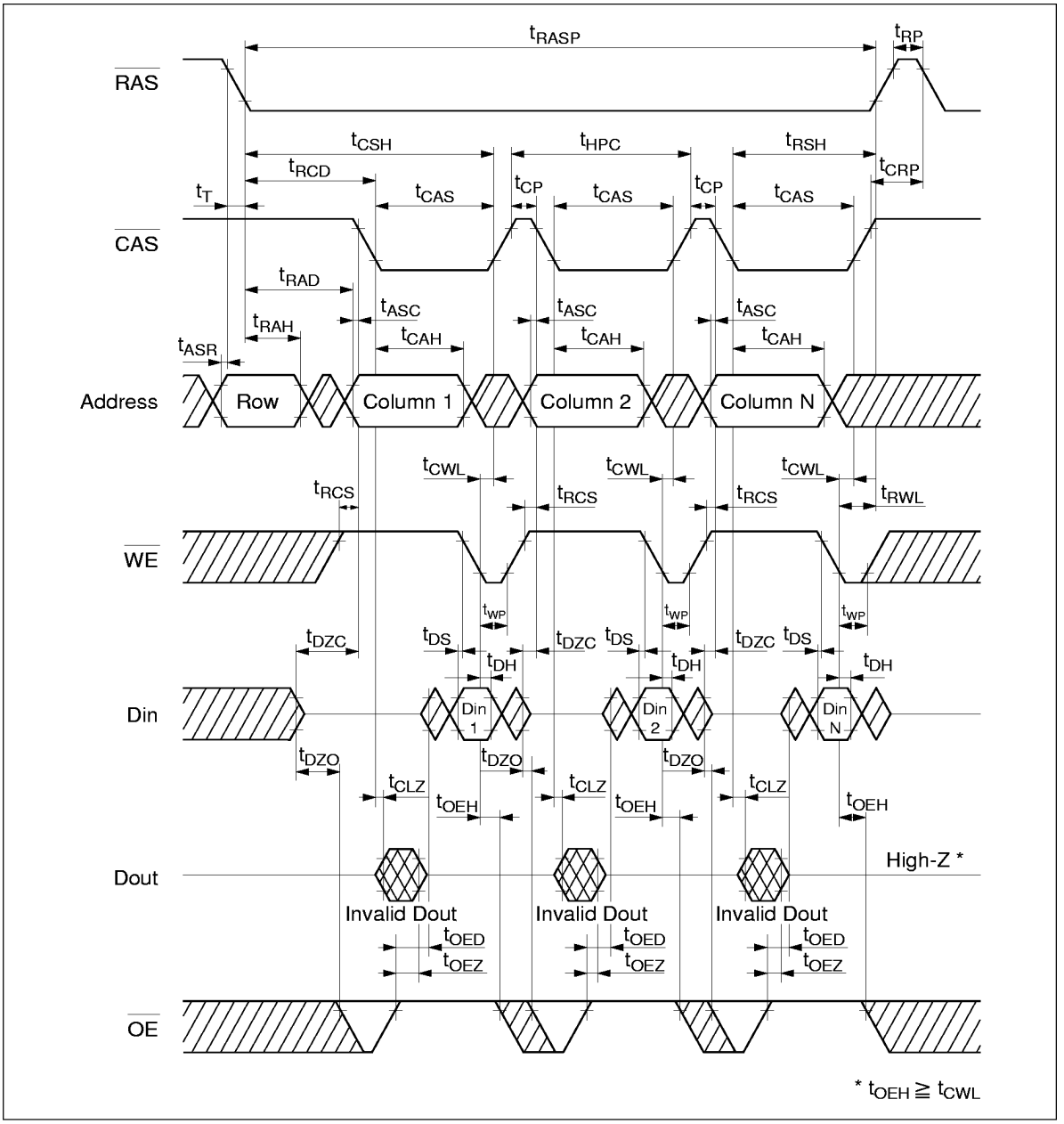

EDO Page Mode Read-Modify-Write Cycle

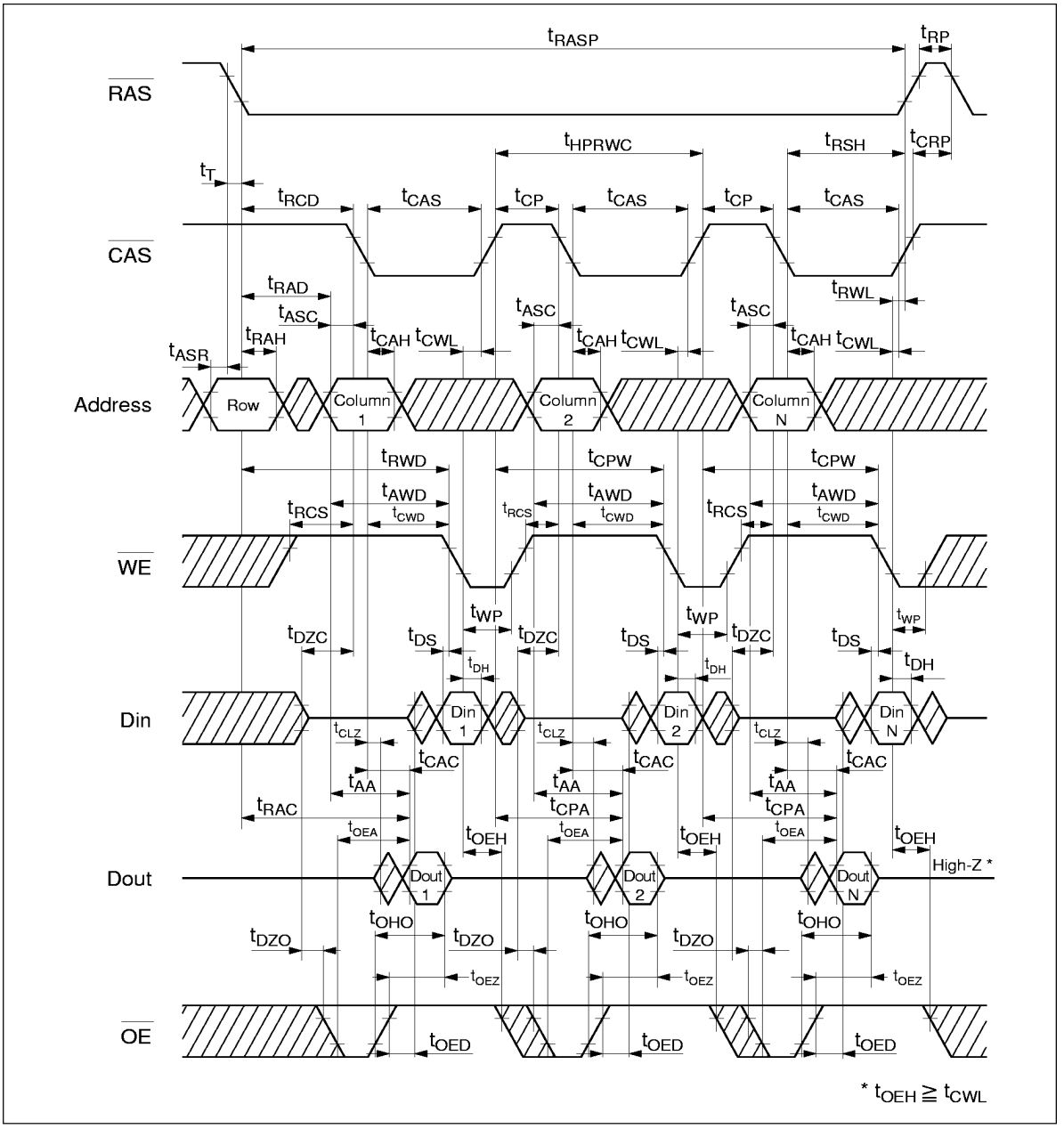

EDO Page Mode Mix Cycle (1)

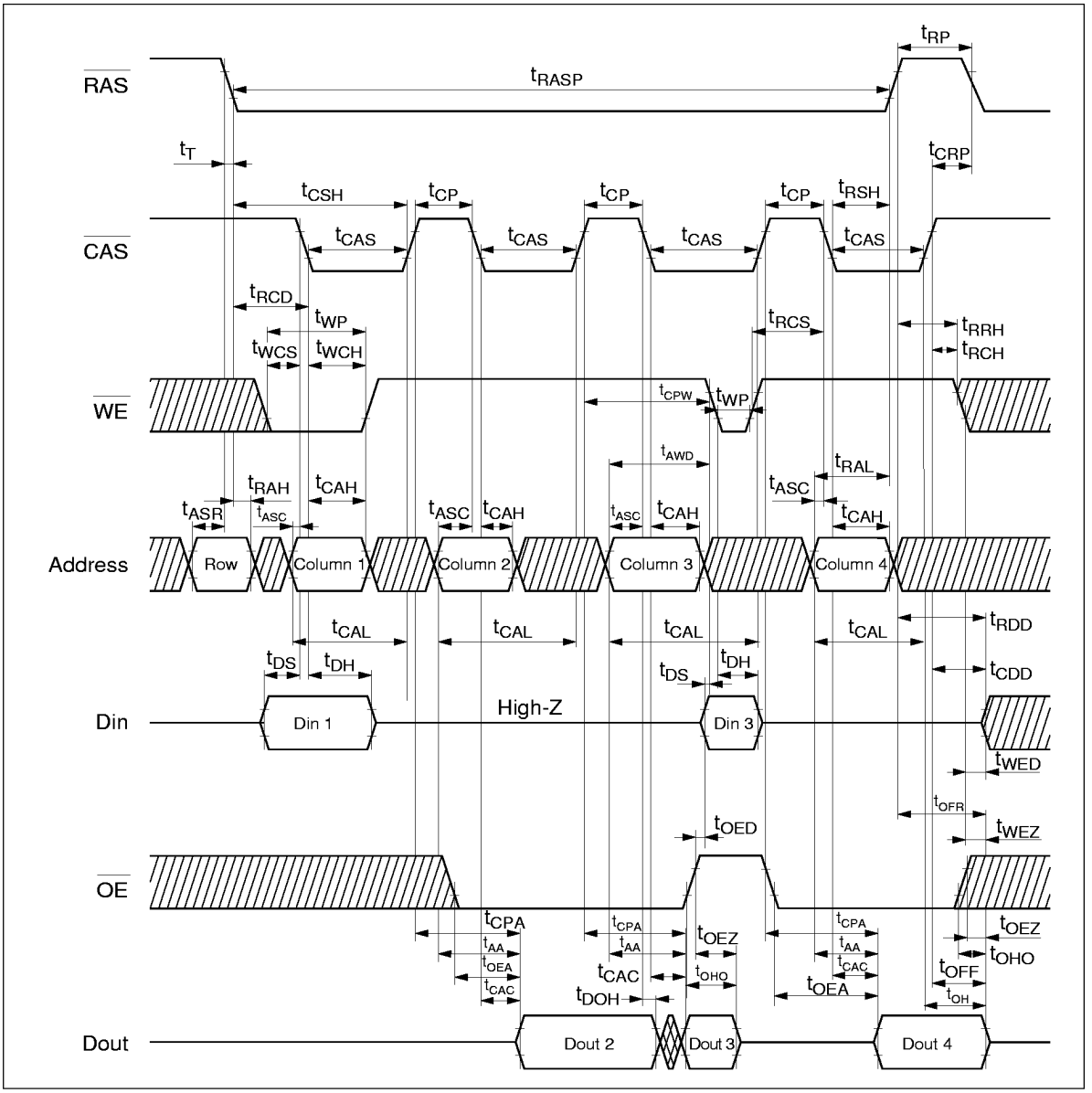

EDO Page Mode Mix Cycle (2)

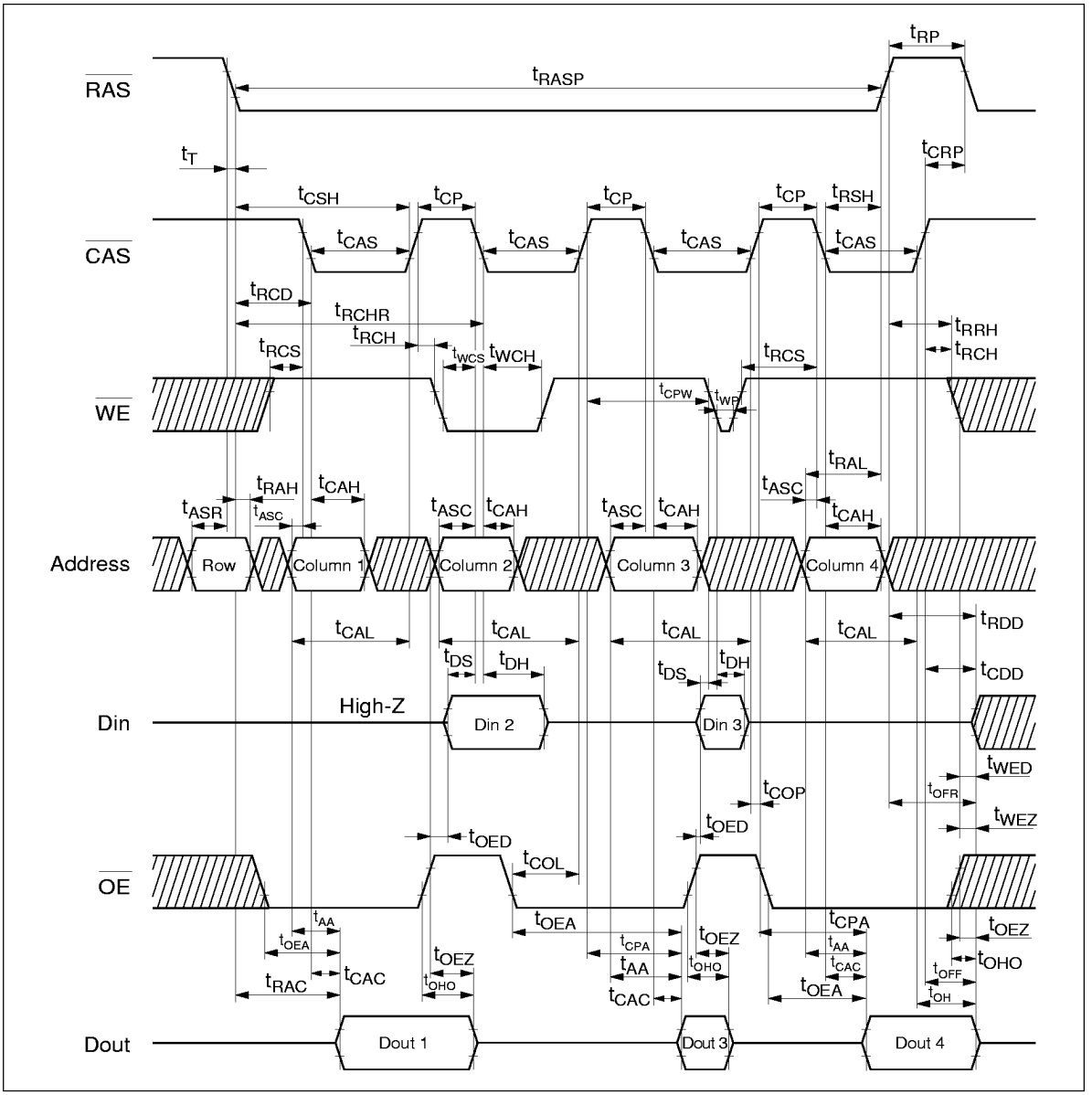

Physical Outline
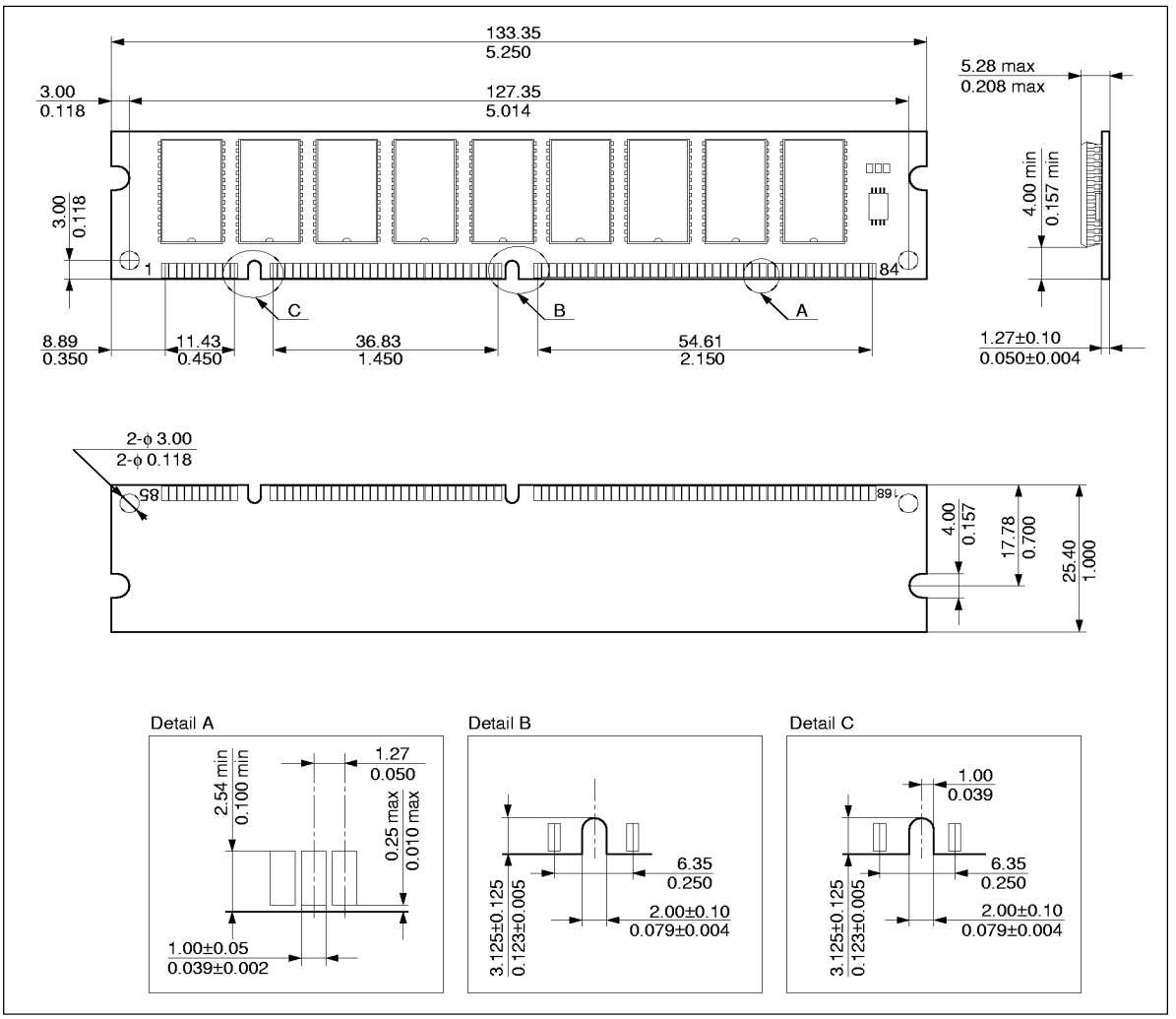
Unit: mm/inch