FUJITSU SEMICONDUCTOR
DATA SHEET

DS501-00004-1v0-E

Memory FRAM

1 M Bit (64 K × 16)

MB85R1002A

■ DESCRIPTIONS

The MB85R1002A is an FRAM (Ferroelectric Random Access Memory) chip consisting of 65,536 words × 16 bits of nonvolatile memory cells fabricated using ferroelectric process and silicon gate CMOS process technologies.
The MB85R1002A is able to retain data without using a back-up battery, as is needed for SRAM.
The memory cells used in the MB85R1002A can be used for 10^{10} read/write operations, which is a significant improvement over the number of read and write operations supported by Flash memory and E^2PROM.
The MB85R1002A uses a pseudo-SRAM interface that is compatible with conventional asynchronous SRAM.

■ FEATURES

- Bit configuration : 65,536 words × 16 bits
- Read/write endurance : 10^{10} times
- Operating power supply voltage : 3.0 V to 3.6 V
- Operating temperature range : − 40 °C to + 85 °C
- Data retention : 10 years (+ 55 °C)
- $\overline{LB}$ and $\overline{UB}$ data byte control
- Package : 48-pin plastic TSOP (1)

2011.7

FUJITSU

■ PIN ASSIGNMENTS

(TOP VIEW)

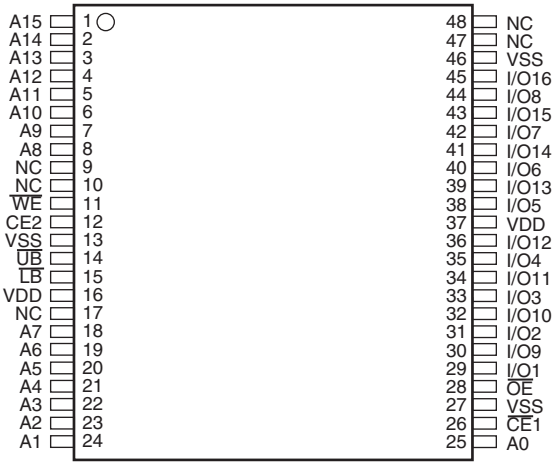

(FPT-48P-M48)

■ PIN DESCRIPTIONS

Pin Number	Pin Name	Functional Description
1 to 8, 18 to 25	A0 to A15	Address Input pins
29 to 36, 38 to 45	I/O1 to I/O16	Data Input/Output pins
26	$\overline{CE1}$	Chip Enable 1 Input pin
12	CE2	Chip Enable 2 Input pin
11	$\overline{WE}$	Write Enable Input pin
28	$\overline{OE}$	Output Enable Input pin
14, 15	$\overline{LB}$, $\overline{UB}$	Data Byte Control Input pins
16, 37	VDD	Supply Voltage pins Connect all two pins to the power supply.
13, 27, 46	VSS	Ground pins Connect all three pins to ground.
9, 10, 17, 47, 48	NC	No Connect pins

■ BLOCK DIAGRAM

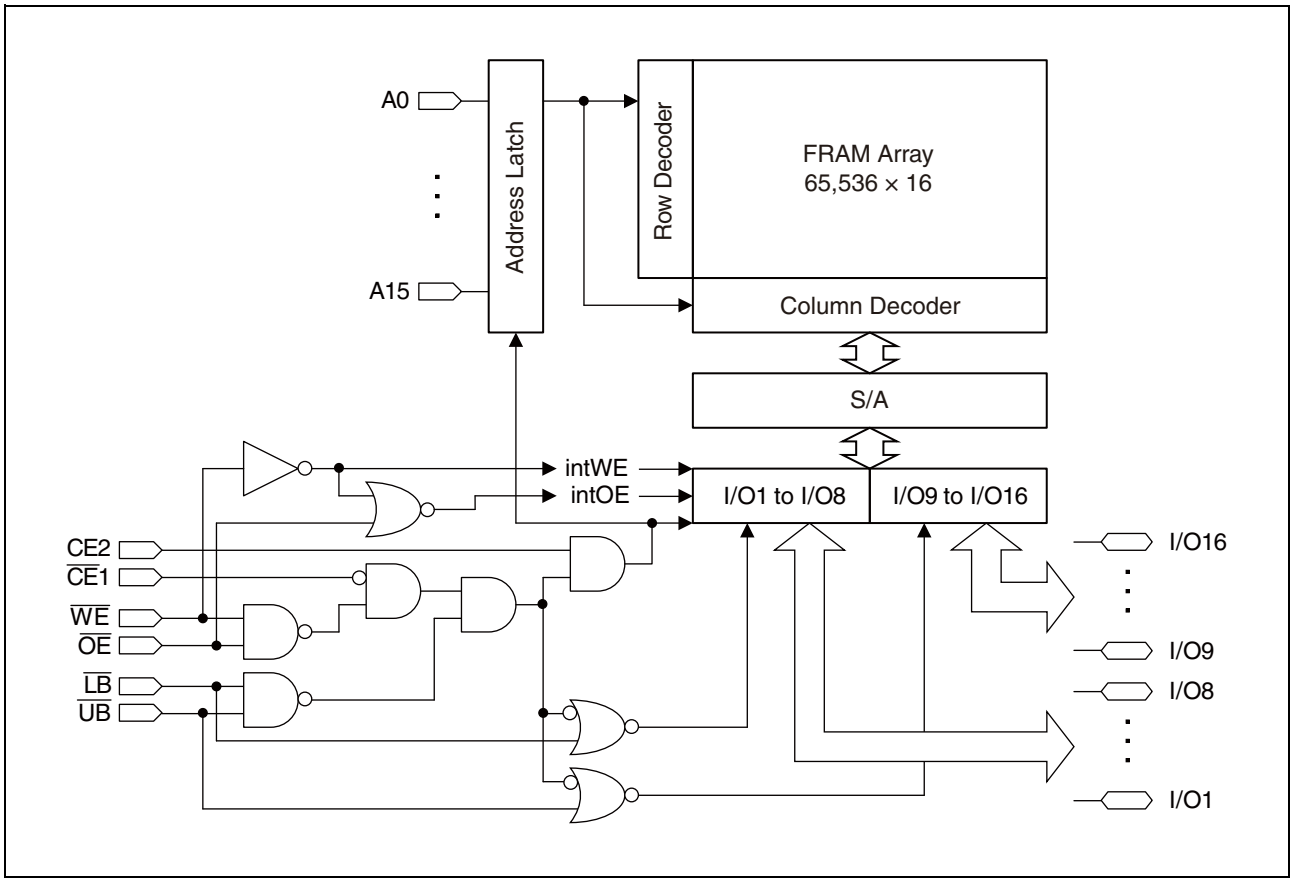

■ FUNCTIONAL TRUTH TABLE

Mode	$\overline{CE1}$	CE2	$\overline{WE}$	$\overline{OE}$	$\overline{LB}$	$\overline{UB}$	I/O1 to I/O8	I/O9 to I/O16	Supply Current
Standby Precharge	H	X	X	X	X	X	Hi-Z	Hi-Z	Standby (I_{SB})
	X	L	X	X	X	X			
	X	X	H	H	X	X			
	X	X	X	X	H	H			
Read	↘	H	H	L	L	L	Data Output	Data Output	Operation (I_{CC})
					L	H	Data Output	Hi-Z	
					H	L	Hi-Z	Data Output	
	L	↗	H	L	L	L	Data Output	Data Output	
					L	H	Data Output	Hi-Z	
					H	L	Hi-Z	Data Output	
Read (Pseudo-SRAM, $\overline{OE}$ control*1)	L	H	H	↘	L	L	Data Output	Data Output	
					L	H	Data Output	Hi-Z	
					H	L	Hi-Z	Data Output	
Write	↘	H	L	H	L	L	Data Input	Data Input	
					L	H	Data Input	Hi-Z	
					H	L	Hi-Z	Data Input	
	L	↗	L	H	L	L	Data Input	Data Input	
					L	H	Data Input	Hi-Z	
					H	L	Hi-Z	Data Input	
Write (Pseudo-SRAM, $\overline{WE}$ control*2)	L	H	↘	H	L	L	Data Input	Data Input	
					L	H	Data Input	Hi-Z	
					H	L	Hi-Z	Data Input	

Note: L = V_{IL}, H = V_{IH}, X can be either V_{IL} or V_{IH}, Hi-Z = High Impedance

↘ : Latch address and latch data at falling edge, ↗ : Latch address and latch data at rising edge

*1 : $\overline{OE}$ control of the Pseudo-SRAM means the valid address at the falling edge of $\overline{OE}$ to read.

*2 : $\overline{WE}$ control of the Pseudo-SRAM means the valid address and data at the falling edge of $\overline{WE}$ to write.

■ ABSOLUTE MAXIMUM RATINGS

Parameter	Symbol	Rating		Unit
		Min	Max	
Power Supply Voltage*	V_{CC}	–0.5	+4.0	V
Input Pin Voltage*	V_{IN}	–0.5	V_{CC} + 0.5 (≤ 4.0)	V
Output Pin Voltage*	V_{OUT}	–0.5	V_{CC} + 0.5 (≤ 4.0)	V
Operating Temperature	T_A	–40	+85	°C
Storage Temperature	T_{STG}	–40	+125	°C

* : All voltages are referenced to VSS = 0 V.

WARNING: Semiconductor devices can be permanently damaged by application of stress (voltage, current, temperature, etc.) in excess of absolute maximum ratings. Do not exceed these ratings.

■ RECOMMENDED OPERATING CONDITIONS

Parameter	Symbol	Value			Unit
		Min	Typ	Max	
Power Supply Voltage*	V_{CC}	3.0	3.3	3.6	V
High Level Input Voltage*	V_{IH}	V_{CC} × 0.8	—	V_{CC} + 0.5 (≤ 4.0)	V
Low Level Input Voltage*	V_{IL}	–0.5	—	+0.6	V
Operating Temperature	T_A	– 40	—	+85	°C

* : All voltages are referenced to VSS = 0 V.

WARNING: The recommended operating conditions are required in order to ensure the normal operation of the semiconductor device. All of the device's electrical characteristics are warranted when the device is operated within these ranges.

Always use semiconductor devices within their recommended operating condition ranges. Operation outside these ranges may adversely affect reliability and could result in device failure.

No warranty is made with respect to uses, operating conditions, or combinations not represented on the data sheet. Users considering application outside the listed conditions are advised to contact their representatives beforehand.

■ ELECTRICAL CHARACTERISTICS

1. DC Characteristics

(within recommended operating conditions)

Parameter	Symbol	Condition	Value			Unit
			Min	Typ	Max	
Input Leakage Current	$\|I_{LI}\|$	V_{IN} = 0 V to V_{CC}	—	—	10	μA
Output Leakage Current	$\|I_{LO}\|$	V_{OUT} = 0 V to V_{CC}, $\overline{CE1}$ = V_{IH} or $\overline{OE}$ = V_{IH}	—	—	10	μA
Operating Power Supply Current	I_{CC}	$\overline{CE1}$ = 0.2 V, CE2 = V_{CC} – 0.2 V, I_{out} = 0 mA*1	—	10	15	mA
Standby Current	I_{SB}	$\overline{CE1} \geq V_{CC} - 0.2$ V	—	10	50	μA
		CE2 ≤ 0.2 V*2				
		$\overline{OE} \geq V_{CC} - 0.2$ V, $\overline{WE} \geq V_{CC} - 0.2$ V*2				
		$\overline{LB} \geq V_{CC} - 0.2$ V, $\overline{UB} \geq V_{CC} - 0.2$ V*2				
High Level Output Voltage	V_{OH}	I_{OH} = – 1.0 mA	$V_{CC} \times 0.8$	—	—	V
Low Level Output Voltage	V_{OL}	I_{OL} = 2.0 mA	—	—	0.4	V

*1 : During the measurement of I_{CC} , the Address, Data In were taken to only change once per active cycle.
Iout : output current

*2 : All pins other than setting pins should be input at the CMOS level voltages such as H ≥ V_{CC} – 0.2 V, L ≤ 0.2 V.

2. AC Characteristics

• **AC Test Conditions**

Supply Voltage	: 3.0 V to 3.6 V
Operating Temperature	: –40 °C to +85 °C
Input Voltage Amplitude	: 0.3 V to 2.7 V
Input Rising Time	: 5 ns
Input Falling Time	: 5 ns
Input Evaluation Level	: 2.0 V / 0.8 V
Output Evaluation Level	: 2.0 V / 0.8 V
Output Impedance	: 50 pF

(1) Read Cycle

(within recommended operating conditions)

Parameter	Symbol	Value		Unit
		Min	Max	
Read Cycle time	t_{RC}	150	—	ns
$\overline{CE}$1 Active Time	t_{CA1}	120	—	ns
CE2 Active Time	t_{CA2}	120	—	ns
$\overline{OE}$ Active Time	t_{RP}	120	—	ns
$\overline{LB}$, $\overline{UB}$ Active Time	t_{BP}	120	—	ns
Precharge Time	t_{PC}	20	—	ns
Address Setup Time	t_{AS}	0	—	ns
Address Hold Time	t_{AH}	50	—	ns
$\overline{OE}$ Setup Time	t_{ES}	0	—	ns
$\overline{LB}$, $\overline{UB}$ Setup Time	t_{BS}	5	—	ns
Output Data Hold time	t_{OH}	0	—	ns
Output Set Time	t_{LZ}	30	—	ns
$\overline{CE}$1 Access Time	t_{CE1}	—	100	ns
CE2 Access Time	t_{CE2}	—	100	ns
$\overline{OE}$ Access Time	t_{OE}	—	100	ns
Output Floating Time	t_{OHZ}	—	20	ns

(2) Write Cycle

(within recommended operating conditions)

Parameter	Symbol	Value		Unit
		Min	Max	
Write Cycle Time	t_{WC}	150	—	ns
$\overline{CE}$1 Active Time	t_{CA1}	120	—	ns
CE2 Active Time	t_{CA2}	120	—	ns
$\overline{LB}$, $\overline{UB}$ Active Time	t_{BP}	120	—	ns
Precharge Time	t_{PC}	20	—	ns
Address Setup Time	t_{AS}	0	—	ns
Address Hold Time	t_{AH}	50	—	ns
$\overline{LB}$, $\overline{UB}$ Setup Time	t_{BS}	5	—	ns
Write Pulse Width	t_{WP}	120	—	ns
Data Setup Time	t_{DS}	0	—	ns
Data Hold Time	t_{DH}	50	—	ns
Write Setup Time	t_{WS}	0	—	ns

3. Pin Capacitance

Parameter	Symbol	Condition	Value			Unit
			Min	Typ	Max	
Input Capacitance	C_{IN}	$V_{IN} = V_{OUT} = 0$ V, f = 1 MHz, $T_A = +25$ °C	—	—	10	pF
Output Capacitance	C_{OUT}		—	—	10	pF

■ TIMING DIAGRAMS

1. Read Cycle Timing ($\overline{CE}$1, CE2 Control)

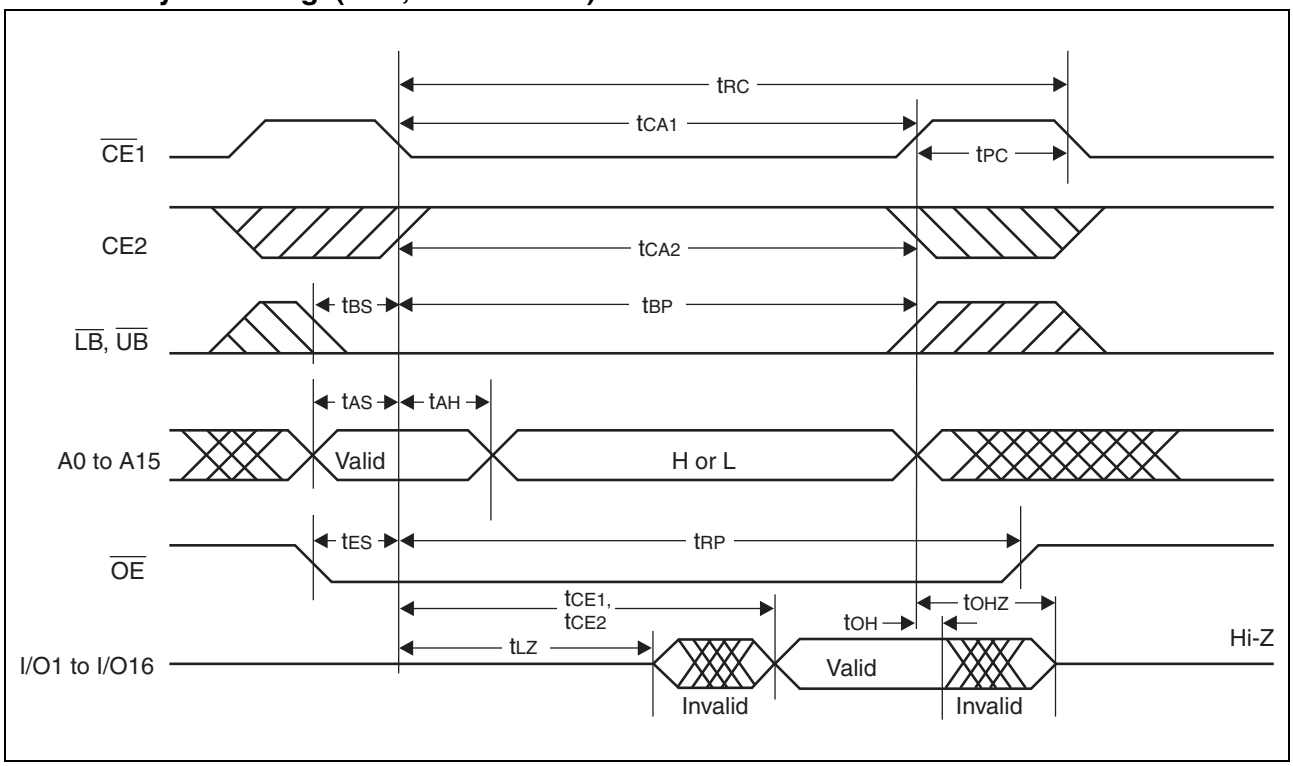

2. Read Cycle Timing ($\overline{OE}$ Control)

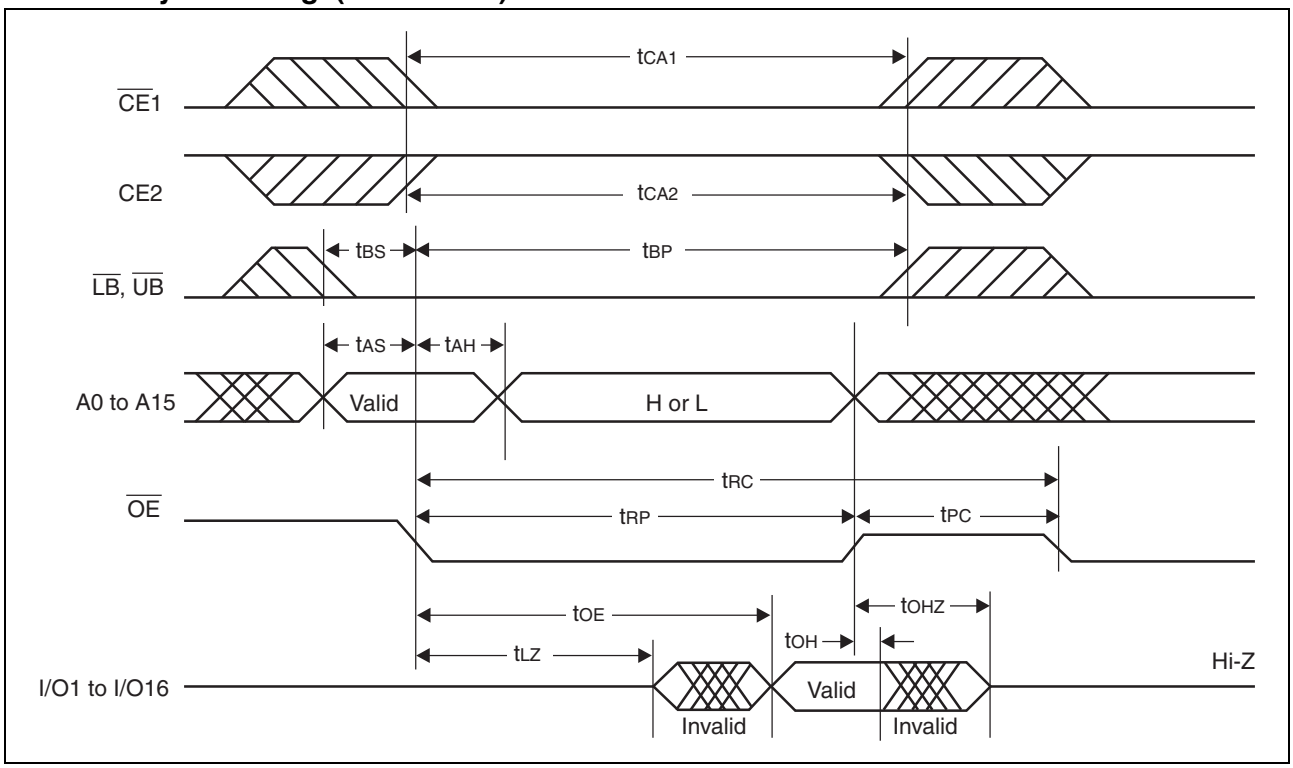

3. Write Cycle Timing ($\overline{CE}$1, CE2 Control)

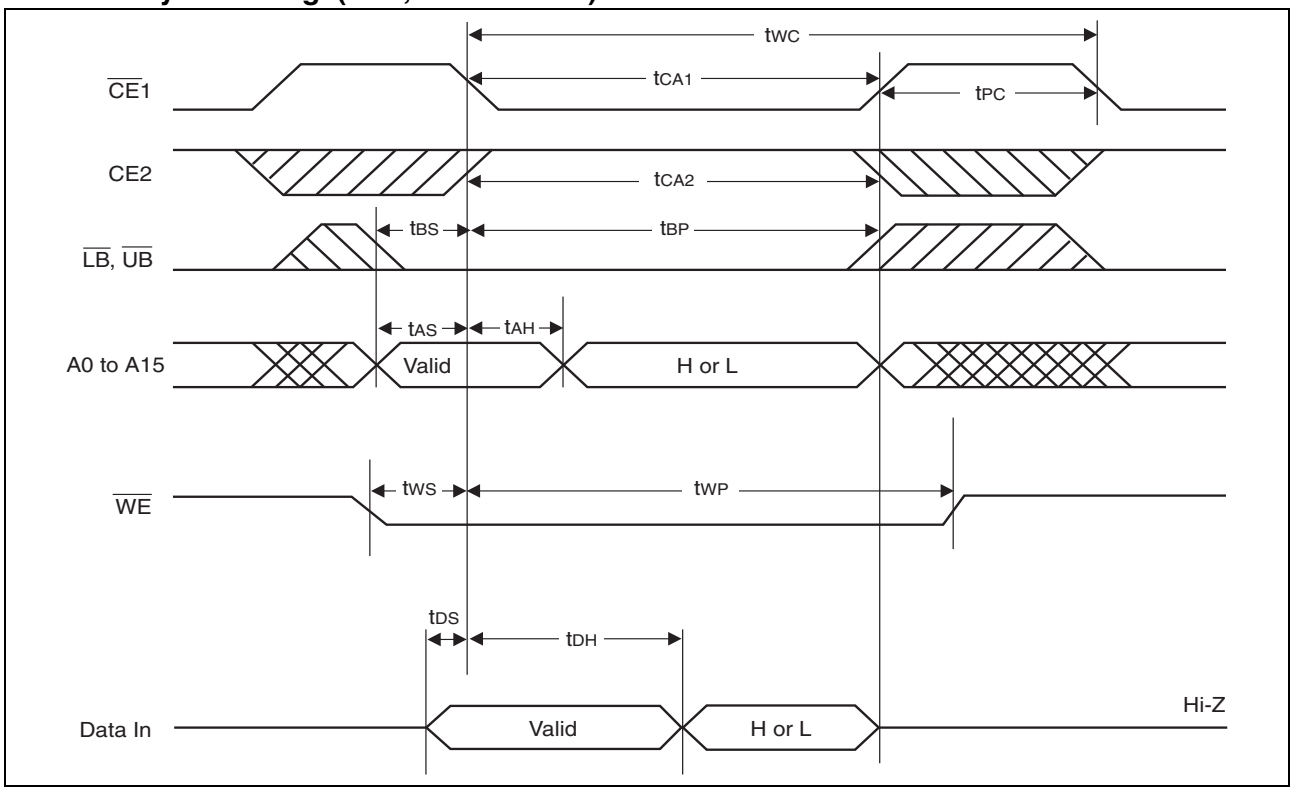

4. Write Cycle Timing ($\overline{WE}$ Control)

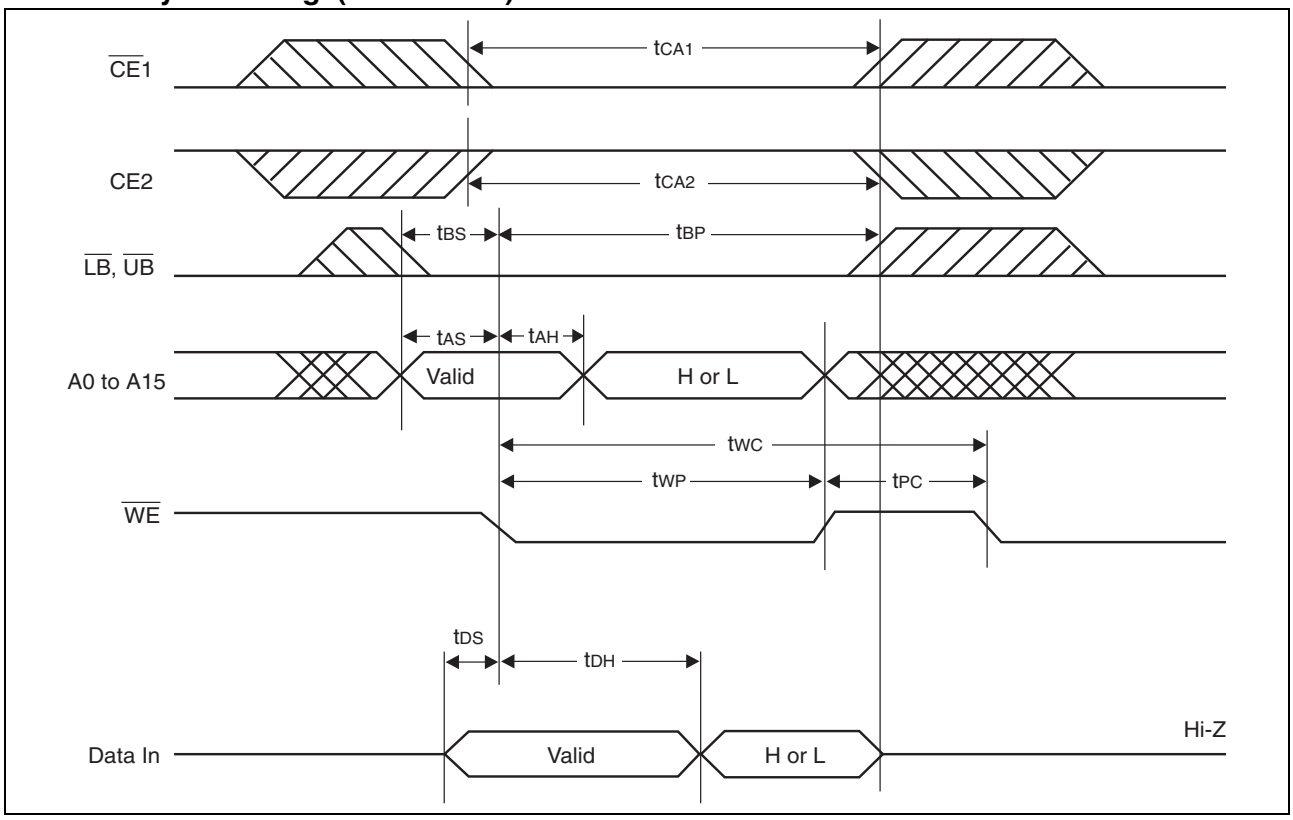

■ POWER ON/OFF SEQUENCE

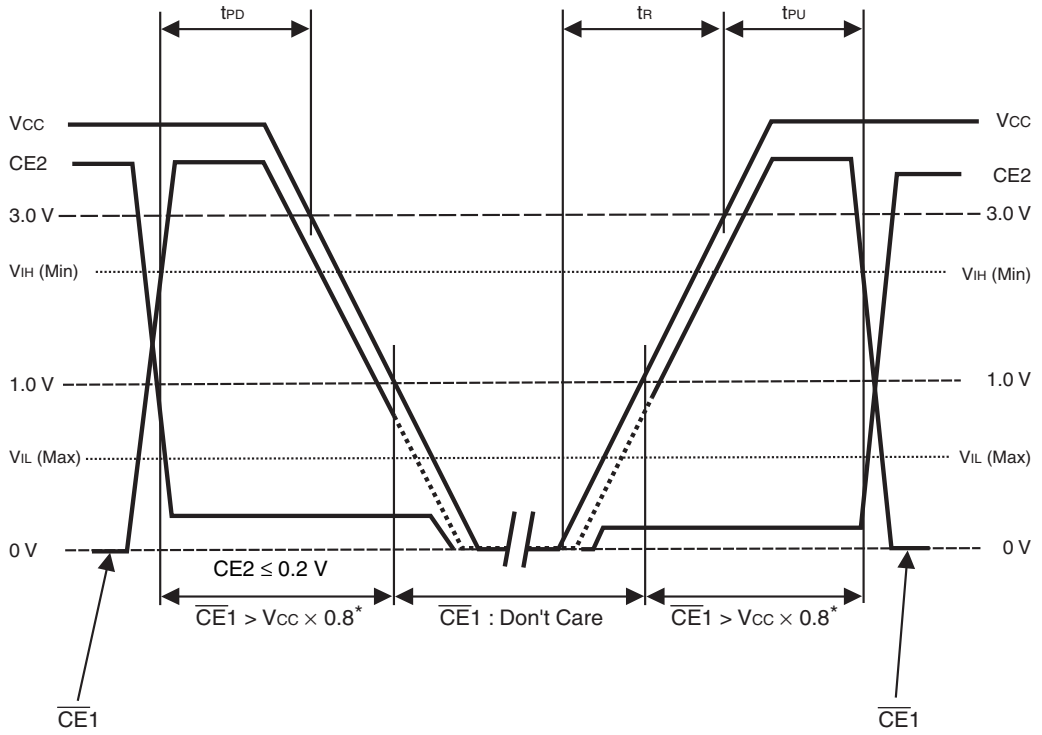

* : $\overline{CE1}$ (Max) < V_{CC} + 0.5 V

Notes:
- Use either of $\overline{CE1}$ or CE2, or both for disable control of the device.
- Because turning the power on from an intermediate level may cause malfunctions, when the power is turned on, V_{CC} is required to be started from 0 V.
- If the device does not operate within the specified conditions of read cycle, write cycle, power on/off sequence, memory data can not be guaranteed.
- When turning the power on or off, it is recommended that CE2 is connected to ground to prevent unexpected writing.

(within recommended operating conditions)

Parameter	Symbol	Value			Unit
		Min	Typ	Max	
$\overline{CE1}$ LEVEL hold time for Power OFF	t_{PD}	85	—	—	ns
$\overline{CE1}$ LEVEL hold time for Power ON	t_{PU}	85	—	—	ns
Power supply rising time	t_R	0.05	—	200	ms

■ NOTES ON USE

After the IR reflow completed, it is not guaranteed to hold the data written prior to the IR reflow.

■ ORDERING INFOMATION

Part number	Package
MB85R1002ANC-GE1	48-pin plastic TSOP(1) (FPT-48P-M48)

■ PACKAGE DIMENSIONS

48-pin plastic TSOP		
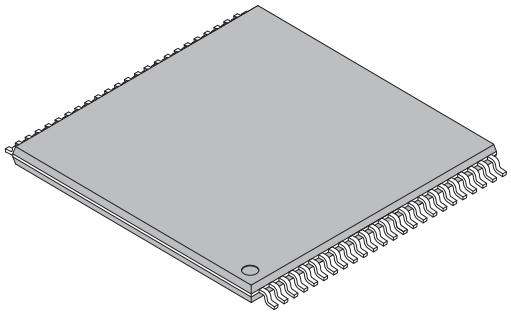	Lead pitch	0.50 mm
	Package width × package length	12.00 mm × 12.40 mm
	Lead shape	Gullwing
	Sealing method	Plastic mold
	Mounting height	1.20 mm MAX
	Weight	0.36 g
(FPT-48P-M48)		

48-pin plastic TSOP
(FPT-48P-M48)

Note 1) # : Resin protrusion. (Each side : +0.15 (.006) Max).
Note 2) * : These dimensions do not include resin protrusion.
Note 3) Pins width and pins thickness include plating thickness.
Note 4) Pins width do not include tie bar cutting remainder.

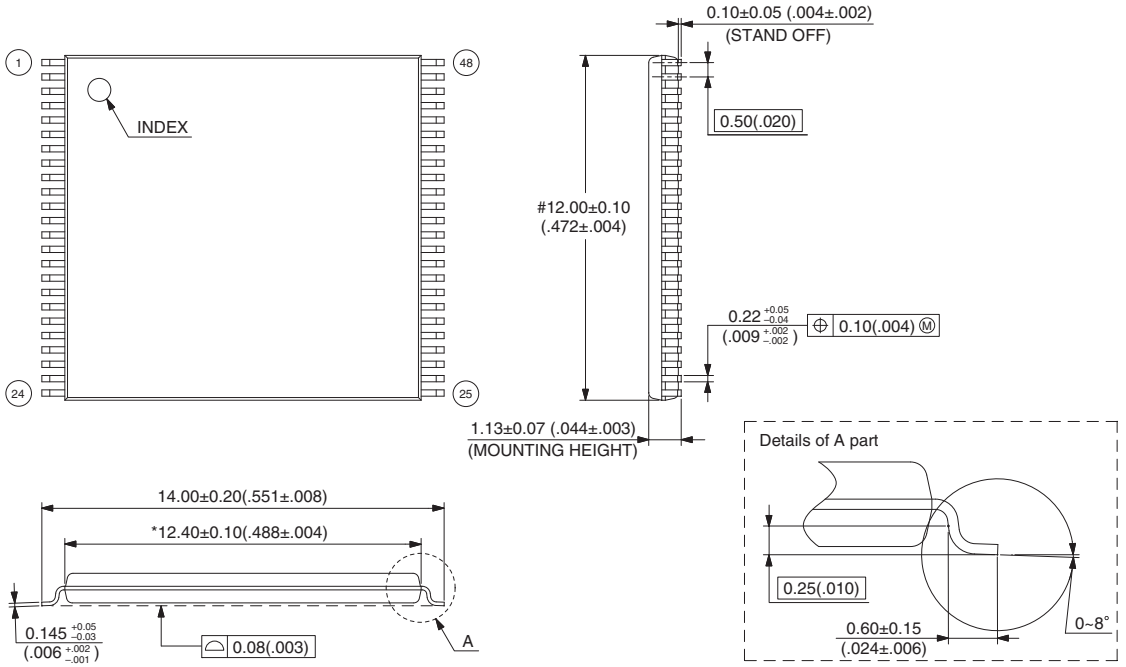

Dimensions in mm (inches).
Note: The values in parentheses are reference values.

Please check the latest package dimension at the following URL.
http://edevice.fujitsu.com/package/en-search/

MEMO

MEMO

FUJITSU SEMICONDUCTOR LIMITED

Nomura Fudosan Shin-yokohama Bldg. 10-23, Shin-yokohama 2-Chome,
Kohoku-ku Yokohama Kanagawa 222-0033, Japan
Tel: +81-45-415-5858
http://jp.fujitsu.com/fsl/en/

For further information please contact:

North and South America
FUJITSU SEMICONDUCTOR AMERICA, INC.
1250 E. Arques Avenue, M/S 333
Sunnyvale, CA 94085-5401, U.S.A.
Tel: +1-408-737-5600 Fax: +1-408-737-5999
http://us.fujitsu.com/micro/

Europe
FUJITSU SEMICONDUCTOR EUROPE GmbH
Pittlerstrasse 47, 63225 Langen, Germany
Tel: +49-6103-690-0 Fax: +49-6103-690-122
http://emea.fujitsu.com/semiconductor/

Korea
FUJITSU SEMICONDUCTOR KOREA LTD.
902 Kosmo Tower Building, 1002 Daechi-Dong,
Gangnam-Gu, Seoul 135-280, Republic of Korea
Tel: +82-2-3484-7100 Fax: +82-2-3484-7111
http://kr.fujitsu.com/fsk/

Asia Pacific
FUJITSU SEMICONDUCTOR ASIA PTE. LTD.
151 Lorong Chuan,
#05-08 New Tech Park 556741 Singapore
Tel : +65-6281-0770 Fax : +65-6281-0220
http://sg.fujitsu.com/semiconductor/

FUJITSU SEMICONDUCTOR SHANGHAI CO., LTD.
Rm. 3102, Bund Center, No.222 Yan An Road (E),
Shanghai 200002, China
Tel : +86-21-6146-3688 Fax : +86-21-6335-1605
http://cn.fujitsu.com/fss/

FUJITSU SEMICONDUCTOR PACIFIC ASIA LTD.
10/F., World Commerce Centre, 11 Canton Road,
Tsimshatsui, Kowloon, Hong Kong
Tel : +852-2377-0226 Fax : +852-2376-3269
http://cn.fujitsu.com/fsp/

Edited: Sales Promotion Department