Linear Type

RDC10 Series

The high accuracy space saving design contributes to reduced weight and size of sets to be designed.

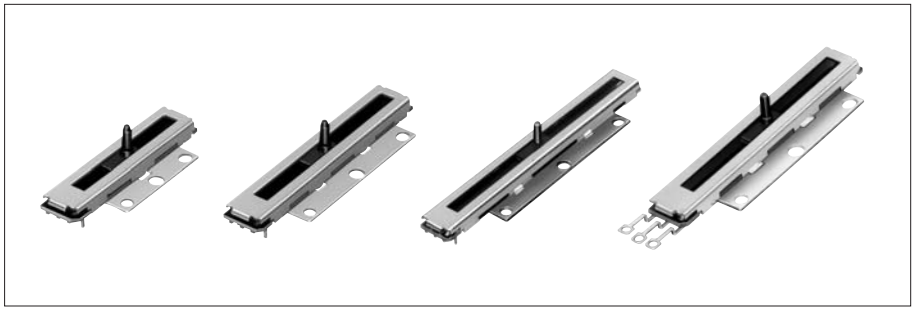

Car Use | RoHS compliant | ALPS Resistive Sensor ™

Features

- Highly accurate linearity achieved through state-of-the-art printing technique.
- Light power operation type, which contributes to torque load reduction at drive motor.

Applications

- For detecting feedback from motor drive units in digital video cameras and CD/MD changers
- For detecting the size in photo copiers, multifunctional printers and projectors
- Digital still cameras
- Car navigation system, car stereo

Typical Specifications

Items	Specifications
Rating voltage	5V DC
Operating force	0.25N max.
Operating life	200,000cycles
Total resistance	10kΩ
Total resistance tolerance	±30%

Product List

Travel (mm)	Linearity	Length of lever (mm)	Length of terminal (mm)	Model No.	Minimum packing unit (pcs.) ※
14	±0.5%	4.5	2	RDC1014A09	2,400
22				RDC1022A05	2,100
32				RDC10320RB	900
47		4.4		RDC1047A03	1,000

Notes

1. Additional product specifications - referring to those not included in the above - are also available.
2. ※The minimum packing unit is the basic unit quantity of your order. Please place purchase orders in integer multiples of the minimum packing unit. Please conact us for export packaging details.

For product varieties, see **P.27**
For other product specifications, see **P.30**

SENSORING

Dimensions

Unit:mm

Photo	Style
RDC10□□ 	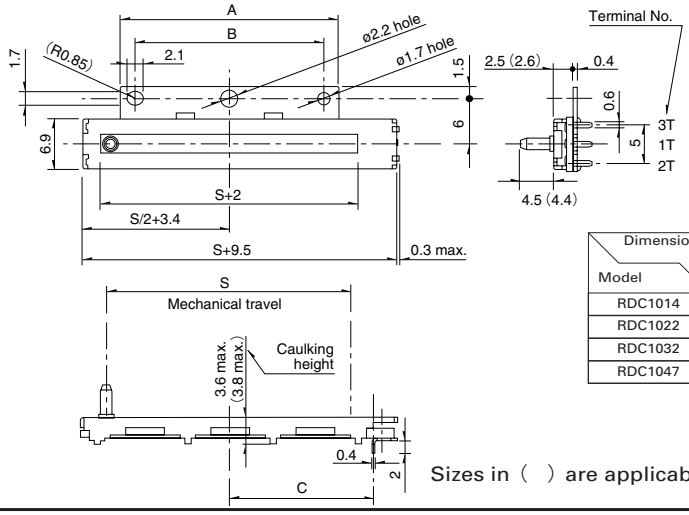

Model \ Dimension	S	A	B	C
RDC1014	14	19	15	10
RDC1022	22	19	15	14
RDC1032	32	29	25	19
RDC1047	47	37	33	26.5

Sizes in ( ) are applicable to RDC1047 only.

Circuit Diagram

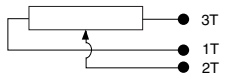

Product Varieties

In addition to the recommended products, the following specifications are also supported.

Lever Variety

∗Sizes in ( ) are applicable to RDC1047 only

Unit:mm

Length	4.5 (4.4)	3.7 (3.6)	3 (2.9)	2.5 (2.4)
Dimensions	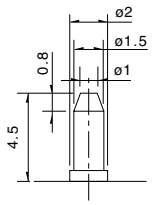	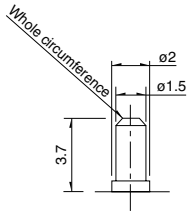	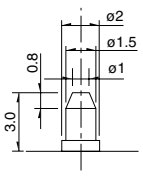	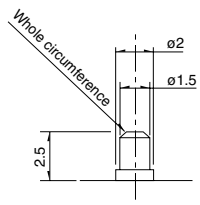

Terminal Variety

For printed wiring

Unit:mm

Dimensions	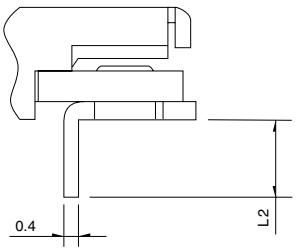			
Length L2	1.5	2	4	5.5

For lead wiring

Unit:mm

Dimensions	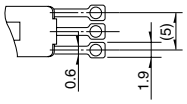

Note

Shows the specification recommended by Alps.

Product Specifications

Item \ Style		Rotary type			Linear type	
	Model	RDC40	RDC501/RDC502/ RDC503/RDC506	RDC80	RDC10	RD7
Operating temperature range		−30℃ to +80℃	−40℃ to +120℃		−30℃ to +85℃	−40℃ to +105℃
Electric performance	Total resistance tolerance	±30%				±20%
	Resistance taper	Linear				
	Rated voltage	5V DC				12V DC
	Max. operating voltage	18V DC	16V DC		5V DC	18V DC
	Linearity	±1%	±2%	±3%	±0.5%	±1%
Mechanical performance	Effective variable range	13rotations	320°	330° (1-phase) 360° (2-phase)	S (travel) −2mm	S (travel)
	Rotational angle	——	(Without stopper)		——	
	Rotational torque	2mN·m max.		10mN·m max.		
	Operating force	——			0.25N max.	2N less.
Durability	100,000cycles	●	——	●	——	●
	200,000cycles	——			●	——
	1,000,000cycles	——	●	——		

Method for Regulating the Linearity

Model RDC40

1. Reference taper : 90%/13rotations
2. VA is measured output value

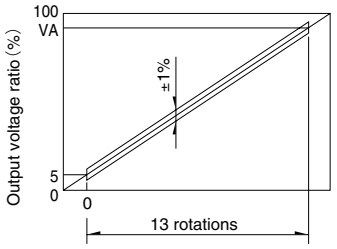

Model RDC50

1. Reference taper : 100%/333.3°
2. Index point is 50% output point

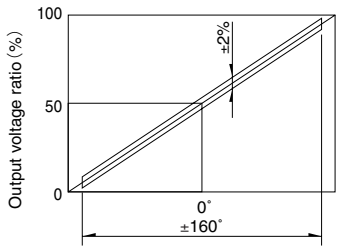

Model RDC80

1. Reference taper : 100%/340°
2. The center is in the configuration diagram condition

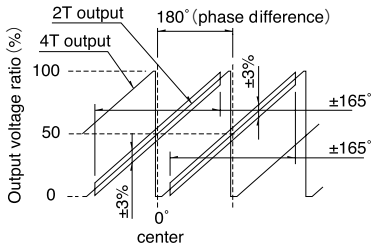

Model RDC10/RD7

With rated voltage applied between terminals 1 and 3, the straight line which connects the measured output values VB and VA at specified reference positions B and A is assumed to be an ideal straight line, so that deviation against the ideal straight line when the voltage applied between terminals 1 and 3 is assumed to be 100% can be expressed as a percentage.