File No. BH7E-DIM-100P | SHEET 1 / 1

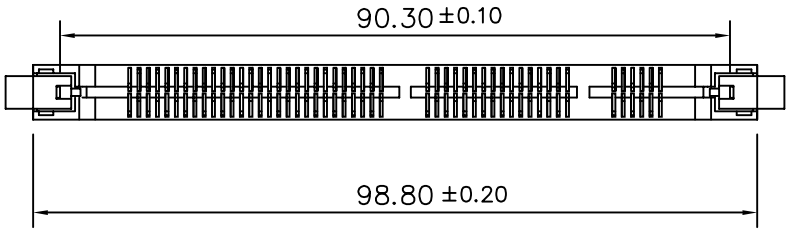

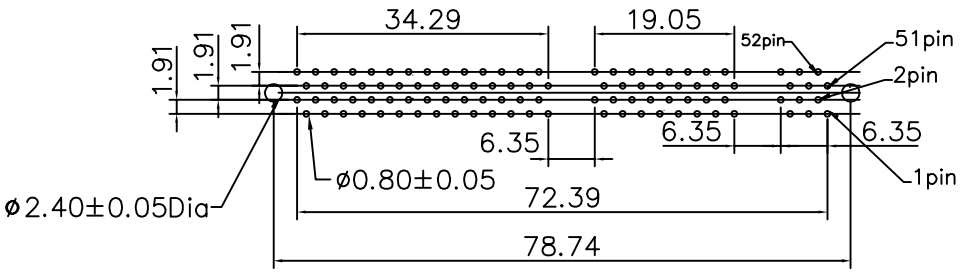

P.C.B. Layout

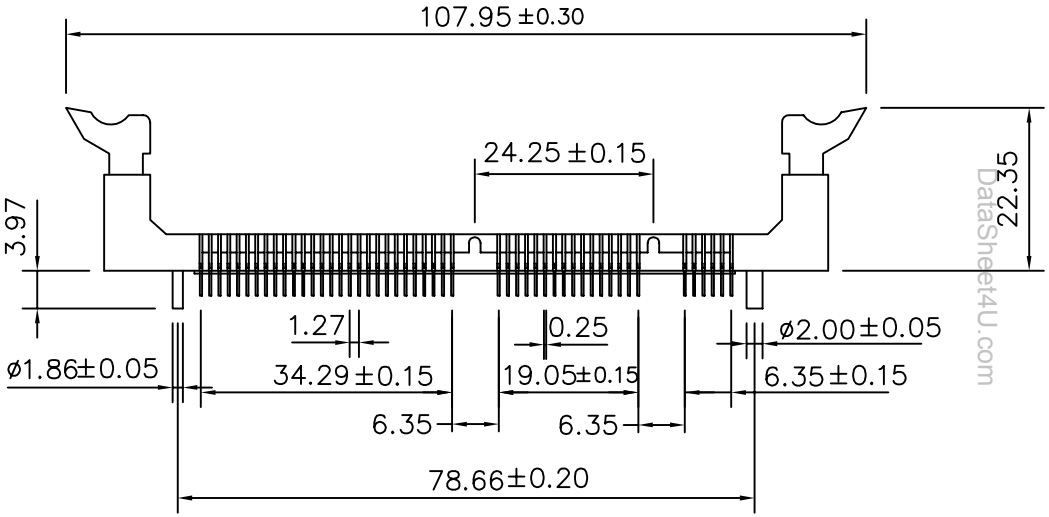

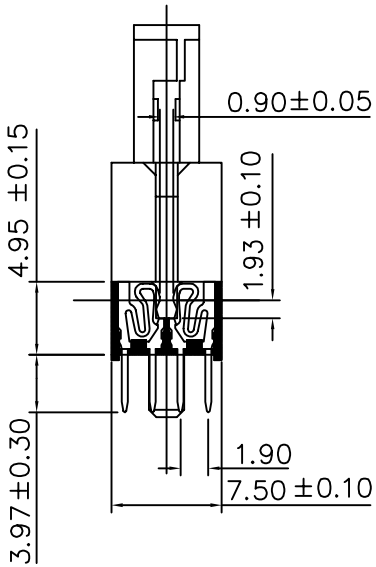

SPECIFICATIONS

Contact Current Rating: 1 AMP
Contact Resistance: 30 Milliohms Max.
Insulation Resistance: 1000Megohms At 500V DC
Dielectric Withstanding Voltage: 1000V AC
Capacitance:1pf Max.
Durabion:25 Circles, Min.
Contact Engaging Force:110g Max.Per Contact,Initial
Contact Separating Force : 40g Min. Per Contact,Initial
Operating And Storage Temperature: −55°C To +105°C
Bady : L.C.P. UL 94V−0
Contact: Copper Alloy
Gold Over Nickel Or Tin Plated
Latch : Nylon 66 UL 94V−0

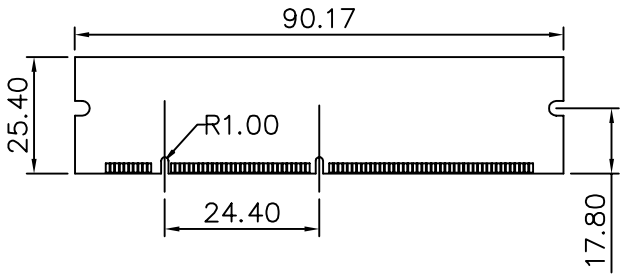

Non−Standard DRAM,3.3 Volt

A NUMBER OF AUK GROUP
太聯事業股份有限公司
AUK CONTRACTORS CO., LTD.

DRAWING No. DIM100	APPROVED BY MEI	UNLESS OTHERWISE SPECIFIED TOLERANCES ARE	
	CHECKED BY RAN	.X ±0.38	
	DRAWING BY HZF	.XX ±0.25	
		AWG.	
SCALE NONE	REV. A	UNIT mm	

AREA	REVISIONS	CHK	DATE

DataSheet4U.com
www.DataSheet4U.com