PCB INDICATORS

SSF-H2230XX-4 Series — T-2mm Dual Tower, 4 Units, Front-Back Leads

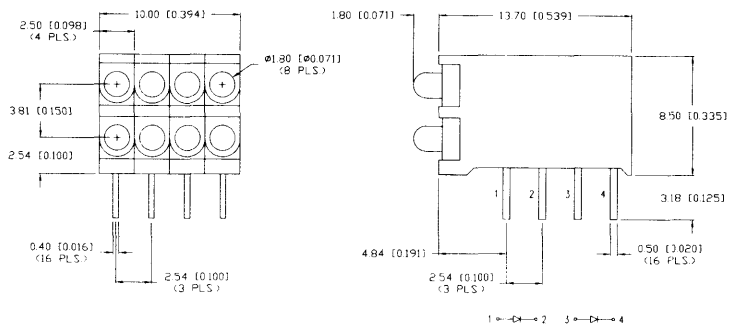

FEATURES / OPTIONS

- State-of-the-Art, Very High Intensity Chip Technology
- Small LED Lighted Lens (2.0mm Ø)
- Vertical Positioning (90° to the Board)
- Multi-Unit Construction
- Polarity Orientation Locking Holder
- Choice of Colors and Lenses
- Low Current Versions 1-2mA (If)
- 2x4 Eight Unit Assembly
- Color Combinations

APPLICATIONS / USES

- Board Level Status Indicators
- Board Level Fault Indicators
- Warning/Alarm Signaling
- Circuit Fault Finder Indicators
- Backlighting Panel Overlays

Lumex Part Number	Dice Material	Emitted Color	Peak (nm)	Epoxy Lens	Operating Current (mA)	Operating TYP. Vf (V)	Brightness TYP. mcd	Brightness @ mA	View Angle° 2x THETA	Component LED Used
HIGH BRIGHTNESS										
SSF-H2230SID-4	AlInGaP	Super High Intensity Red	636	Red Diffused	5-25	2.0	120	20	70	SSL-LX20333SID
SSF-H2230SOD-4	AlInGaP	Super Orange	610	Orange Diffused	5-25	2.0	120	20	70	SSL-LX20333SOD
SSF-H2230SPGD-4	AlInGaP	Super Pure Green	562	Green Diffused	5-25	2.2	70	20	70	SSL-LX20333SPGD
SSF-H2230SYD-4	AlInGaP	Super Yellow	590	Yellow Diffused	5-25	2.0	120	20	70	SSL-LX20333SYD
SSF-H2230USBD-4	InGaN/SiC	Ultra Super Blue	470	Blue Diffused	5-25	3.5	100	20	70	SSL-LX20333USBD

SSF-LXH512 Series — T-2mm Dual Tower, Single Unit, Side-by-Side Leads

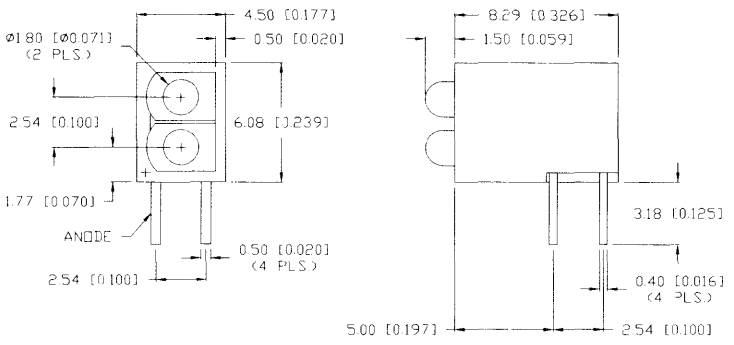

FEATURES / OPTIONS

- State-of-the-Art, Very High Intensity Chip Technology
- Small LED Lighted Lens (2.0mm Ø)
- Vertical Positioning (90° to the Board)
- Multi-Unit Construction
- Polarity Orientation Locking Holder
- Choice of Colors and Lenses
- Low Current Versions 1-2mA (If)
- Dual Tower Unit
- Black or Gray Holders for High Contrast
- Color Combinations

APPLICATIONS / USES

- Board Level Status Indicators
- Board Level Fault Indicators
- Warning/Alarm Signaling
- Circuit Fault Finder Indicators
- Backlighting Panel Overlays

Lumex Part Number	Dice Material	Emitted Color	Peak (nm)	Epoxy Lens	Operating Current (mA)	Operating TYP. Vf (V)	Brightness TYP. mcd	Brightness @ mA	View Angle° 2x THETA	Component LED Used
HIGH BRIGHTNESS										
SSF-LXH512SID	AlInGaP	Super High Intensity Red	636	Red Diffused	5-25	2.0	120	20	70	SSL-LX20333SID
SSF-LXH512SOD	AlInGaP	Super Orange	610	Orange Diffused	5-25	2.0	120	20	70	SSL-LX20333SOD
SSF-LXH512SPGD	AlInGaP	Super Pure Green	562	Green Diffused	5-25	2.2	70	20	70	SSL-LX20333SPGD
SSF-LXH512SYD	AlInGaP	Super Yellow	590	Yellow Diffused	5-25	2.0	120	20	70	SSL-LX20333SYD
SSF-LXH512USBD	InGaN/SiC	Ultra Super Blue	470	Blue Diffused	5-25	3.5	100	20	70	SSL-LX20333USBD