REVISION E

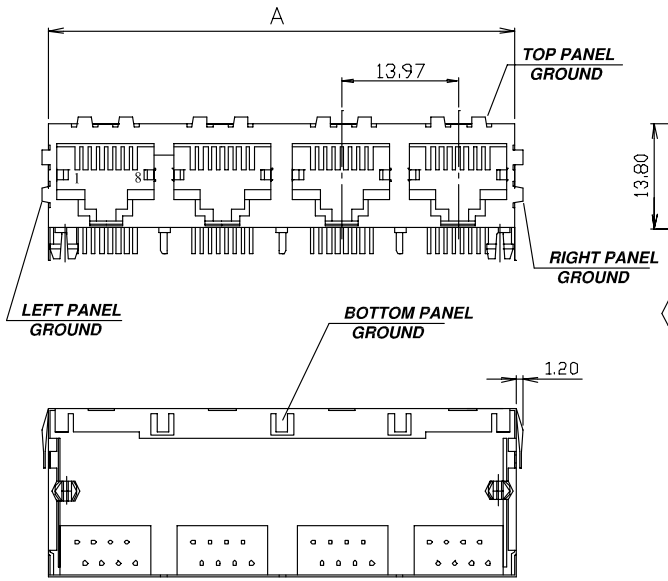

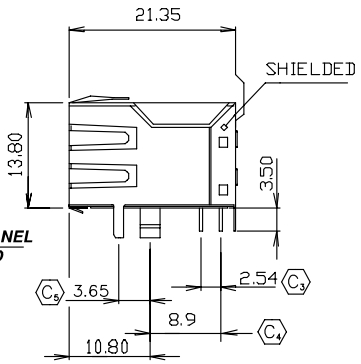

MODM-A-XX-8P8C-X-S-PG

TYPE
-A

PORTS
-02
-04
-08

POSITIONS/CONTACTS
-8P8C: 8 Pos/8 Con

C2 PLATING
-G: .000015" Au
-H: .000030" Au
-E: .000050" Au
(SEE NOTE 2)

SHIELD
-S

PANEL GROUND
-PG

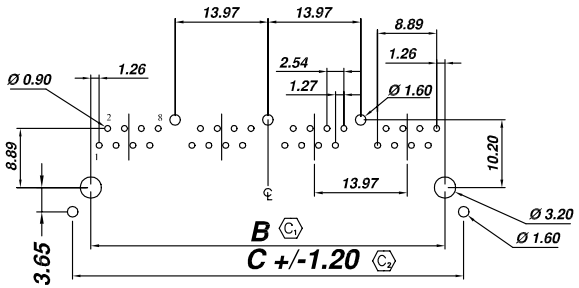

PCB LAYOUT

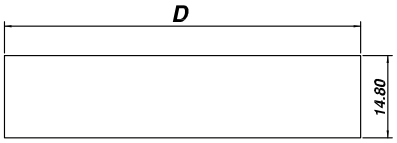

SUGGESTED PANEL CUTOUT DIMENSIONS

NOTES:

1. C. REPRESENTS A CRITICAL DIMENSION
2. PLATING APPLIES TO MATING AREA, GOLD FLASH ON TAILS
3. PIN NUMBERS REFLECT PIN CALLOUT ON THE CONNECTOR, NOT USER SYTEM WIRING ASSIGNMENT.
4. CRITCALS ON PCB LAYOUT APPLY TO CONNECTOR.

TABLE 1

	2 Port	4 Port	8 Port
Dimension "A"	31.10	59.10	115.10
Dimension "B"	25.40	53.34	109.22
Dimension "C"	30.96	58.90	114.78
Dimension "D"	32.10	60.10	116.10

DO NOT SCALE FROM THIS PRINT

UNLESS OTHERWISE SPECIFIED, DIMENSIONS ARE IN MM.
TOLERANCES ARE:
DECIMALS X.XX±0.25 X.XXX±0.13 X.XXXX±0.05
ANGLES ±3

PROPRIETARY NOTE
THIS DOCUMENT CONTAINS INFORMATION CONFIDENTIAL AND PROPRIETARY TO SAMTEC INC. AND SHALL NOT BE REPRODUCED OR TRANSFERRED TO OTHER DOCUMENTS OR DISCLOSED TO OTHERS OR USED FOR ANY PURPOSE OTHER THAN THAT FOR WHICH IT WAS OBTAINED WITHOUT THE EXPRESSED WRITTEN CONSENT OF SAMTEC INC.

samtec
520 PARK EAST BLVD. NEW ALBANY, IN 47150
(812) 944-6733 P.O. BOX 1147 TWX: 810-540-4085

CODE: 55322

DO NOT SCALE DRAWING SHEET SCALE: 1:2
INSULATOR: PBT 20% Glass Filled (UL 94V-0) Black
CONTACT : Phosphor Bronze
SHELL : Copper Alloy
MAX FLASH ALLOWED: .002
MAX GATE VESTIGE: .002
F:\DWG\misc\mktg

DESCRIPTION: 1x2 8 Position Side Entry Gang Jack

DWG. NO. MODM-A-XX-8P8C-X-S-PG

BY: J.RILEY 10/31/2003 SHEET 1 OF 1