特性 low & High current

# CHIP INDUCTORS 1008F SERIES

用在 line filter. Power 電源

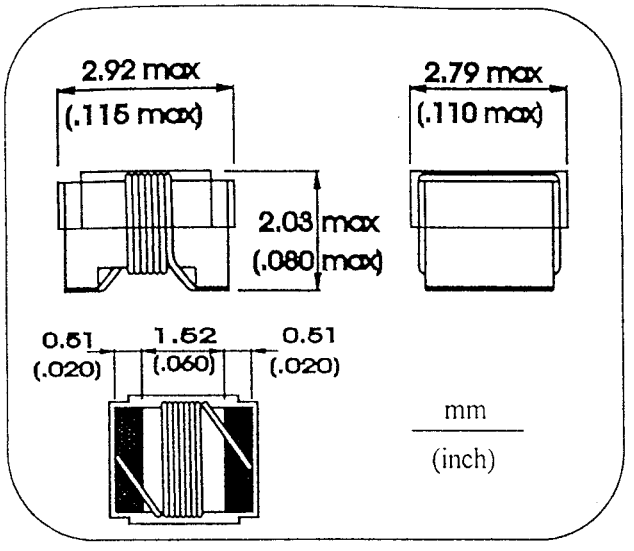


## FEATURE

◎ Small and lightweight surface mounting type.
◎ Coil body made of ferrite material in chip form.
· High Q and lower DCR than our 1008C series
· Inductance Range:1.2~10uH.
◎ Ferrite construction for higher current carrying capacity. 磁芯 Ferrite,

## APPLICATION

◎ Pagers.
◎ Mobile communication units.
◎ Portable telephone.
◎ Hybrid.

※Special specifications are available for customer's requirement.

| Part No. | Ind. (uH) | Test Freq. (MHz) | Inductance Tolerance | Q Min | Test Freq. (MHz) | SRF MHz Min | Rdc Ohms Max | RATED CURRENT (mA) |
|---|---|---|---|---|---|---|---|---|
| 1008F-1R2 | 1.2 | 7.9 | K，J | 48 | 50 | 210 | .68 | 650 |
| 1008F-1R5 | 1.5 | 7.9 | K，J | 41 | 50 | 190 | .76 | 630 |
| 1008F-1R8 | 1.8 | 7.9 | K，J | 39 | 50 | 170 | .84 | 600 |
| 1008F-2R2 | 2.2 | 7.9 | K，J | 34 | 50 | 150 | 1.10 | 520 |
| 1008F-2R7 | 2.7 | 7.9 | K，J | 34 | 50 | 135 | 1.28 | 490 |
| 1008F-3R3 | 3.3 | 7.9 | K，J | 32 | 50 | 120 | 1.46 | 450 |
| 1008F-3R9 | 3.9 | 7.9 | K，J | 32 | 7.9 | 105 | 1.56 | 420 |
| 1008F-4R7 | 4.7 | 7.9 | K，J | 31 | 7.9 | 90 | 1.68 | 400 |
| 1008F-5R6 | 5.6 | 7.9 | K，J | 31 | 7.9 | 80 | 1.82 | 380 |
| 1008F-6R8 | 6.8 | 7.9 | K，J | 31 | 7.9 | 70 | 2.00 | 360 |
| 1008F-8R2 | 8.2 | 7.9 | K，J | 23 | 7.9 | 65 | 2.65 | 330 |
| 1008F-100 | 10.0 | 7.9 | K，J | 31 | 7.9 | 60 | 2.95 | 300 |
| | | | | | | | | |
| | | | | | | | | |
| | | | | | | | | |
| | | | | | | | | |
| | | | | | | | | |
| | | | | | | | | |
| | | | | | | | | |

※ Inductance Tolerance K=10%，J=5%


FRONTIER ELECTRONICS CO., LTD.

FRONTIER ELECTRONICS CO., LTD.
4 TH FL. NO. 48, MIN CHUAN RD., HSIN TIEN,TAIPEI HSIEN,TAIWAN, R.O.C.
TEL: (02) 29147685-9 FAX: (02) 29186304 11/06/'99 D