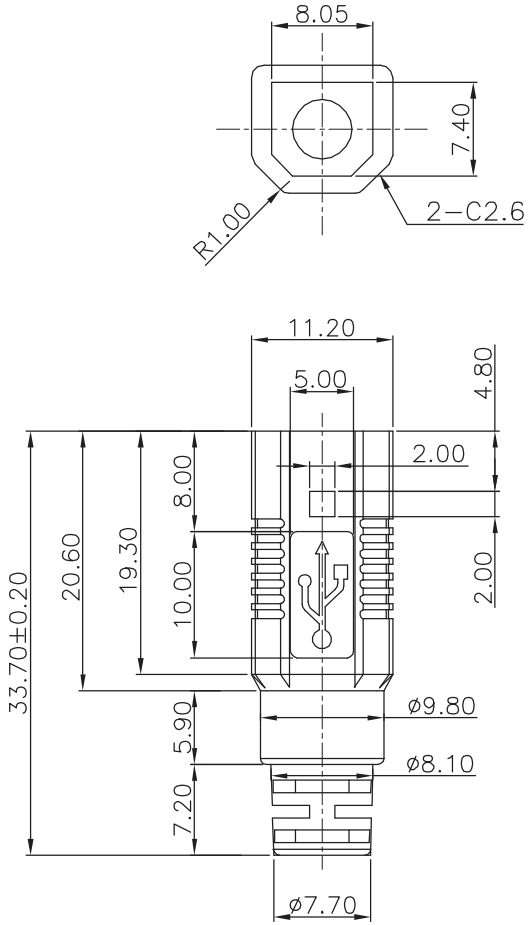

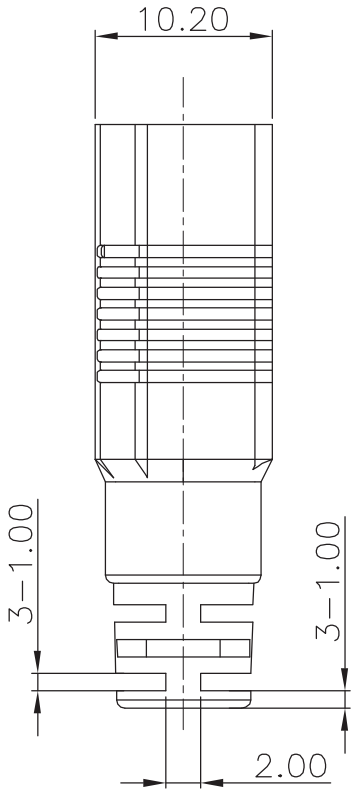

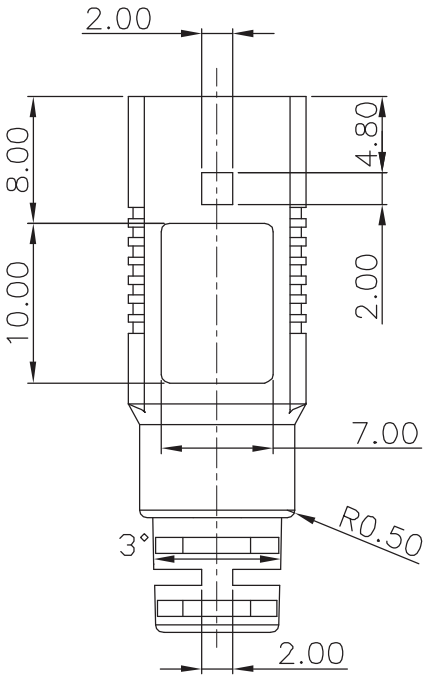

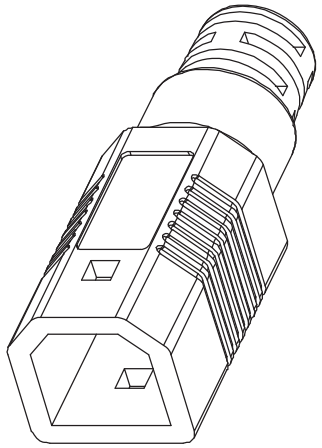

Material:

- Material: PVC
- Color: Black/White/Beige

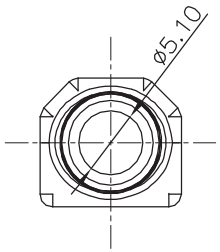

Unit: MM±0.10MM

Scale	1:1						Name	Item No. A-USBPB-HOOD-R
TOLERANCE								
X.X	±0.40				Drawn	10.19.11	Chappell	
X.XX	±0.25				Approved			Title: Hoods for USB-Assembly, Type B, Male
X.XXX	±0.15							
Angle	±3°							Drawing No. rev00
			Modification	Date	Name			Replace / Sheet

RoHS Complaint

ASSMANN WSW components