2.54mm (.100") Pitch DIN 41612/IEC 603-2 Mixed Layout Connector

85009

Male Style M

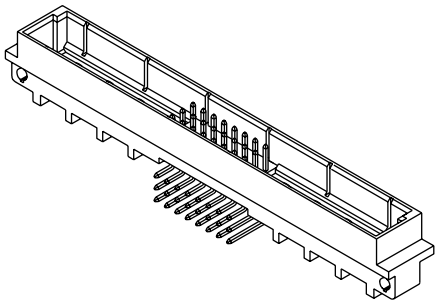

FEATURES AND SPECIFICATIONS

Features and Benefits

- Cavities for coaxial and high current contacts
- FMLB/LMFB pins (extended/recessed) available
- Board lock option
- Flux proof option
- Solder tails for 1.6mm (.062") PCBs (for 2.4mm (.094") PCBs on request)

Reference Information

Product Specification: PS-85003-0001
Packaging: Tray
UL File No.: E29179
CSA File No.: LR19980-390
Mates With:
85048—Straight female style M
85056—Right angle female style M "inverse"
Use With: 85023—Special power and coaxial terminals

Electrical

Current: 1.5A

Physical

Housing: Glass-filled polyester, UL 94V-0
Contact: Brass
Operating Temperature: -55 to +125˚C

CATALOG DRAWING (FOR REFERENCE ONLY)

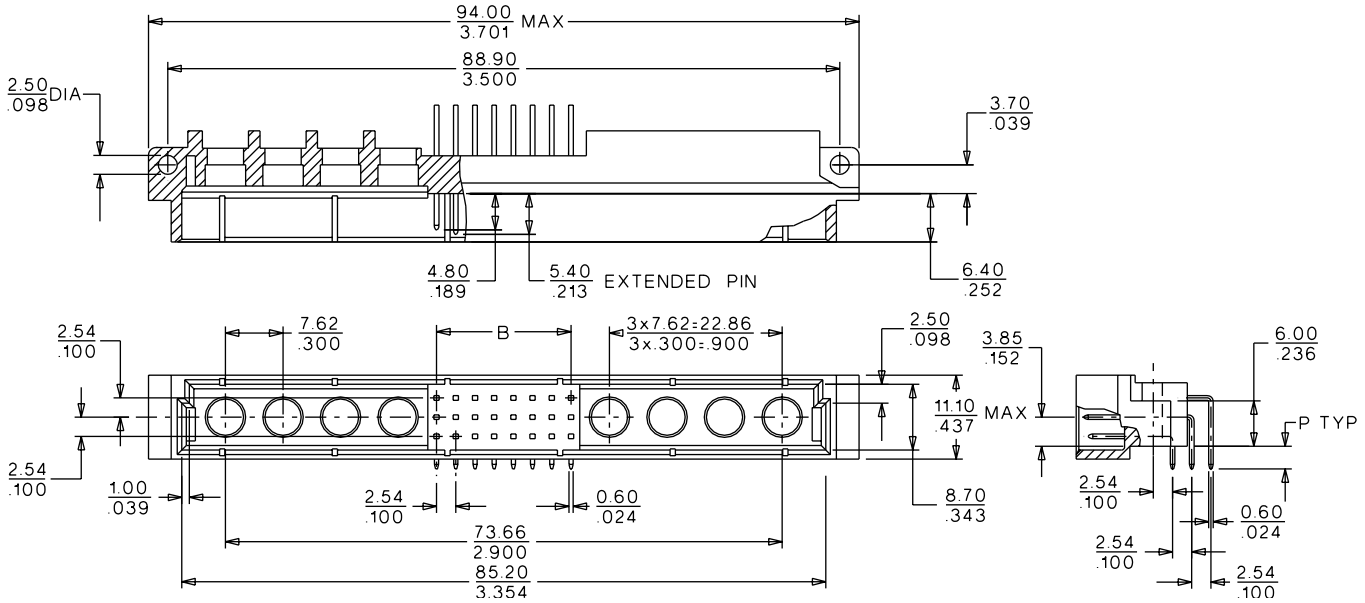

ORDERING INFORMATION AND DIMENSIONS

Circuits	Order No. Performance Level* 1	Order No. Performance Level* 2	Contact Loading	Rows	Solder Tail Dimension P	Option(s)
24+8	85009-0555	85009-0012	Full	a, b, c	3.0 (.118)	
		85009-0684				FMLB-2 pins: first, last row a
42+6	85009-0854	85009-0048	Full	a, b, c	3.0 (.118)	
		85009-0050				Flux-proof
		85009-0373				FMLB-2 pins: first, last row a
		85009-0737				FMLB-4 pins: first, last row a, c
60+4	85009-0335	85009-0074	Full	a, b, c	3.0 (.118)	
		85009-0452				FMLB-2 pins: first, last row a
78+2	85009-0359	85009-0115	Full	a, b, c	3.0 (.118)	
		85009-0725				FMLB-4 pins: first, last row a, c
		85009-0971				Flux-proof

For other versions contact Molex

* Performance levels based on test conditions per DIN 41612, part 5:

1: >500 mating cycles. 10 day industrial environment (S02)

2: >400 mating cycles. 4 day industrial environment (S02)