REV	DESCRIPTION	BY DATE	APPD
B	ER6578	PSM 03/13/08	PSM

NOTES: UNLESS OTHERWISE SPECIFIED
1. 84 & 88 SERIES MOUNTING HARDWARE KIT FOR MATING BAIL LOCK CONNECTOR.
2. HARDWARE TO BE SHIPPED UNASSEMBLED IN POLY BAG.

SPECIFICATIONS

MATERIAL SPECIFICATIONS

SPRING CLIP	STAINLESS STEEL FINISH: PASSIVATE
BRACKET	STEEL FINISH: 50 MICROINCHES PURE TIN OVER 50 MICROINCHES NICKLE OVER COPPER FLASH
PAN HEAD SCREW	BRASS FINISH: NICKEL PLATE
HEX NUT	STAINLESS STEEL FINISH: PASSIVATE
LOCKWASHER	STAINLESS STEEL FINISH: PASSIVATE

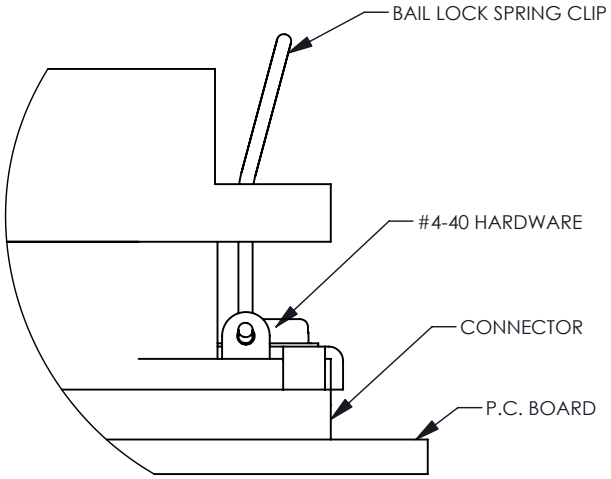

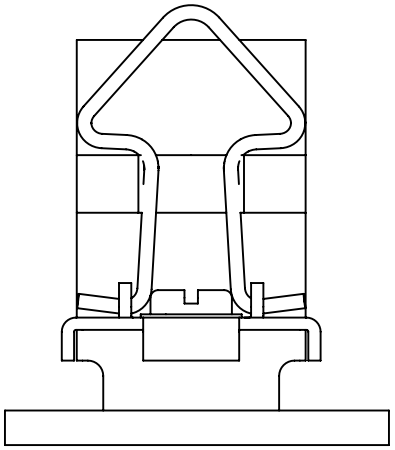

CATALOG P/N: 84-105-5557

PER ASME Y14.5M-1994
UNLESS OTHERWISE SPECIFIED:
DIMENSIONS ARE IN INCHES [MM]
TOLERANCES:
DECIMAL: .XX [X.X] ± .01 [0.3]
.XXX [X.XX] ± .005 [0.13]
.XXXX [X.XXX] ± .XXXX
ANGLES: ± 2° SCALE: 2:1

CUSTOMER DRAWING

DRAWN	DATE	APPROVED	DATE
CWB	10/11/07	XXX	XX/XX/XX
APPROVED	DATE	APPROVED	DATE
VBH	10/12/07	XXX	XX/XX/XX

WinchesterElectronics
Winchester Electronics Corporation
62 Barnes Industrial Road North
Wallingford, Connecticut 06492

84 & 88 SERIES HARDWARE KIT
(RoHS)

A	26217	SHT 1 OF 1	REV B