REV	DESCRIPTION	BY DATE	APPD
C	REVISED PER ER17022	CY 07/17/09	CTC

NOTES: UNLESS OTHERWISE SPECIFIED

1. FOR GENERAL SERIES SPECIFICATIONS, SEE SDPRF-206.
2. MATERIAL SPECIFICATIONS:
   BAYONET SLEEVE, BODY, CONTACT, FERRULE: BRASS PER ASTM B16
   INSULATOR: TEFLON PER ASTM D1710
   SPRING WASHER, OUTER CONTACT: BERYLLIUM COPPER, ASTM-B-194
   GASKET: SILICONE RUBBER
3. FINISH SPECIFICATIONS:
   BAYONET SLEEVE, BODY, FERRULE: .000100MIN NICKEL PER AMS-QQ-N-290 OVER COPPER FLASH PER ASTM B734 (ROHS)
   CONTACT: .000030 MIN. GOLD PER ASTM B488, OVER NICKEL PER AMS-QQ-N-290 (ROHS)
   ALL OTHER METAL PARTS: .000050 MIN NICKEL PER AMS-QQ-N290 OVER .000050 MIN COPPER PER ASTM B734
4. CONTACT AND FERRULE SHIPPED LOOSE.
5. FOR USE WITH TACHII CABLE TCX-3CFB & CANARE CABLE L-3CFB OR EQUIVALENT.
6. FOR CRIMPING USE KINGS KTH-5000 & KTH-5005 (.232 HEX, .054 SQUARE FLAT).
7. ASSEMBLE TO CABLE USING CAP-E01.
8. THESE AREA HAVE WHITE MARKING.
9. ELECTRIC SPECIFICATIONS:
   IMPEDANCE: 75 OHMS
   FREQUENCY RANGE: DC TO 3 GHz
   RETURN LOSS: 25 dB MIN (DC TO 3 GHz)

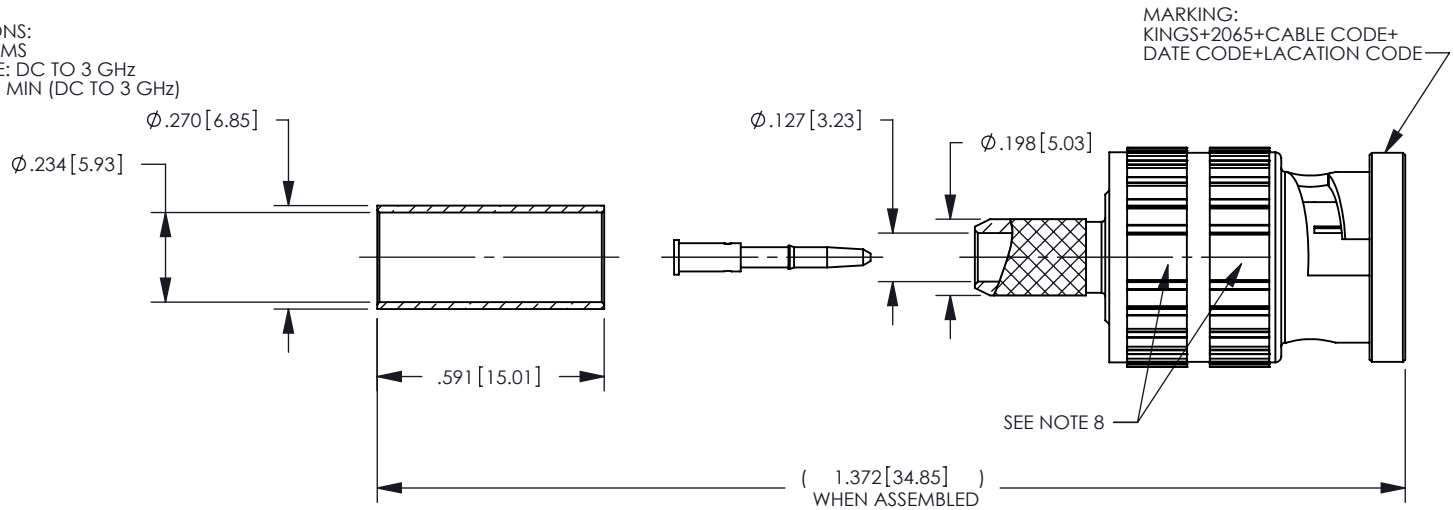

CATALOG P/N: 2065-E00-3CF01N

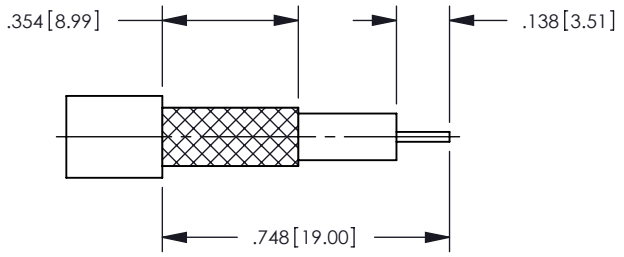

RECOMMENDED CABLE
TRIMMING DIMENSIONS

PER ASME Y14.5M-1994
UNLESS OTHERWISE SPECIFIED:
DIMENSIONS ARE IN INCHES [MM]
TOLERANCES:
DECIMAL: .XX [X.X] ± .01 [0.3]
.XXX [X.XX] ± .005 [0.13]
.XXXX [X.XXX] ± .0005
ANGLES: ± 2° SCALE: 2:1

CUSTOMER DRAWING

DRAWN	DATE	APPROVED	DATE
CY	02/18/08	RAF	02/21/08
APPROVED	DATE	APPROVED	DATE
DCam	02/21/08	XXX	XX/XX/XX

WinchesterElectronics
KINGS®
Winchester Electronics Corporation
62 Barnes Industrial Road North
Wallingford, Connecticut 06492

BNC 75 PLUG
FOR TACHII TCX-3CFB
(ROHS COMPLIANT)

A | SD2065-E00-3CF01N | SHT 1 OF 1 | REV C