6482

NOTES:
1. MATERIAL: .016 THK. BRONZE ALLOY
2. FINISH: NONE
3. PRODUCT SPECIFICATION: NONE

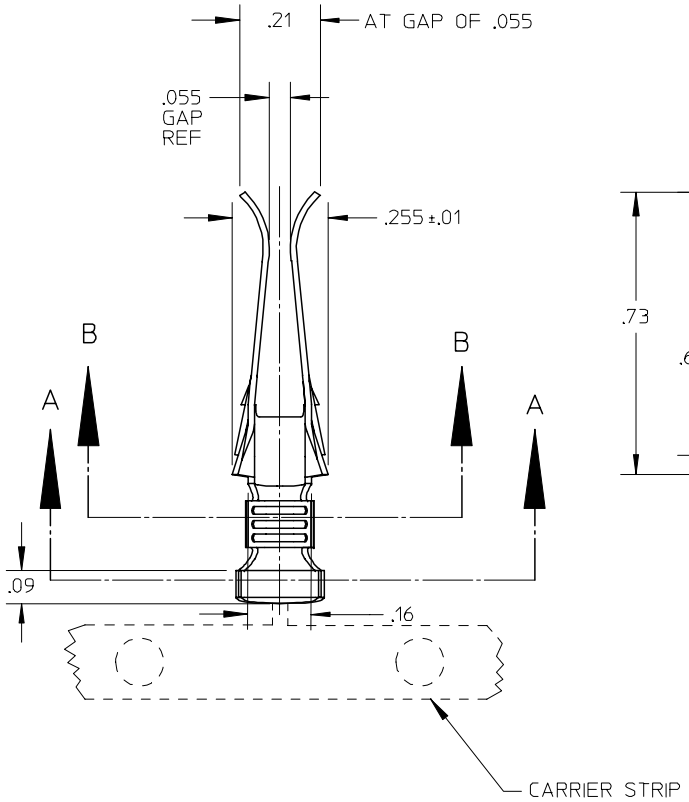


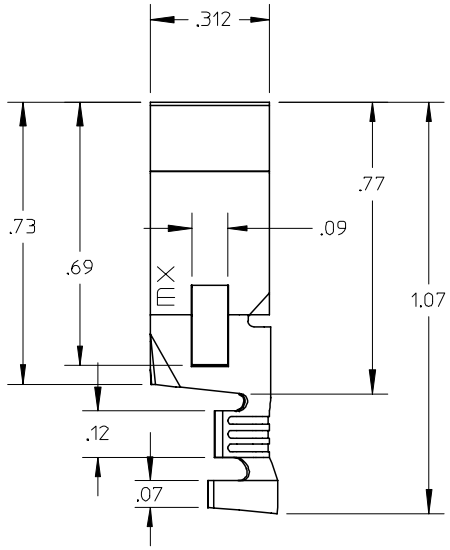


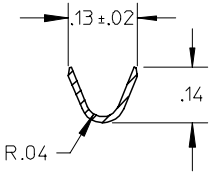


SECTION B-B

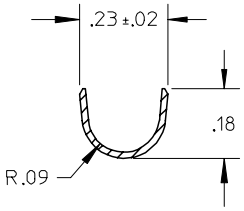


SECTION A-A

| REV | DESCRIPTION |
|---|---|
| G | REVISED & REDRAWN<br>EC NO: UCP2004-0879<br>DRWN: JSCHAFER 2003/11/14<br>CH'KD: 2003/11/14<br>APPR: BWIRKUS 2003/11/17 |

QUALITY SYMBOLS
▼ = 0
▽ = 0

GENERAL TOLERANCES (UNLESS SPECIFIED)

| | mm | INCH |
|---|---|---|
| 4 PLACES | ± --- | ± --- |
| 3 PLACES | ± --- | ± .005 |
| 2 PLACES | ± | ± .010 |
| 1 PLACE | ± | ± --- |
| ANGULAR ±1/2° | | |

DRAFT WHERE APPLICABLE
MUST REMAIN WITHIN DIMENSIONS

SCALE 2:1
DESIGN UNITS INCH
DIMENSION STYLE INCH ONLY
DRAWN BY JSCHAFER DATE 11-06-03
CHECKED BY BWIRKUS DATE 11-07-03
APPROVED BY BWIRKUS DATE 11-07-03

THIRD ANGLE PROJECTION
REVISE ON CAD ONLY

TITLE
RANGE PROBE TERMINAL
FOR 14, 16, 18 GA. WIRE

molex MOLEX INCORPORATED

MATERIAL NO. 05-12-1100
DOCUMENT NO. SD-6482-*
SHEET NO. 1 OF 1

THIS DRAWING CONTAINS INFORMATION THAT IS PROPRIETARY TO MOLEX INCORPORATED AND SHOULD NOT BE USED WITHOUT WRITTEN PERMISSION

A

tb_frame_A
rev. B1 2000/08/01