DWG. NO.	
	261-910-0632C

REV	DESCRIPTION	BY DATE	APPD
A	RELEASED PER NPR 1837A	JN 7/28/00	

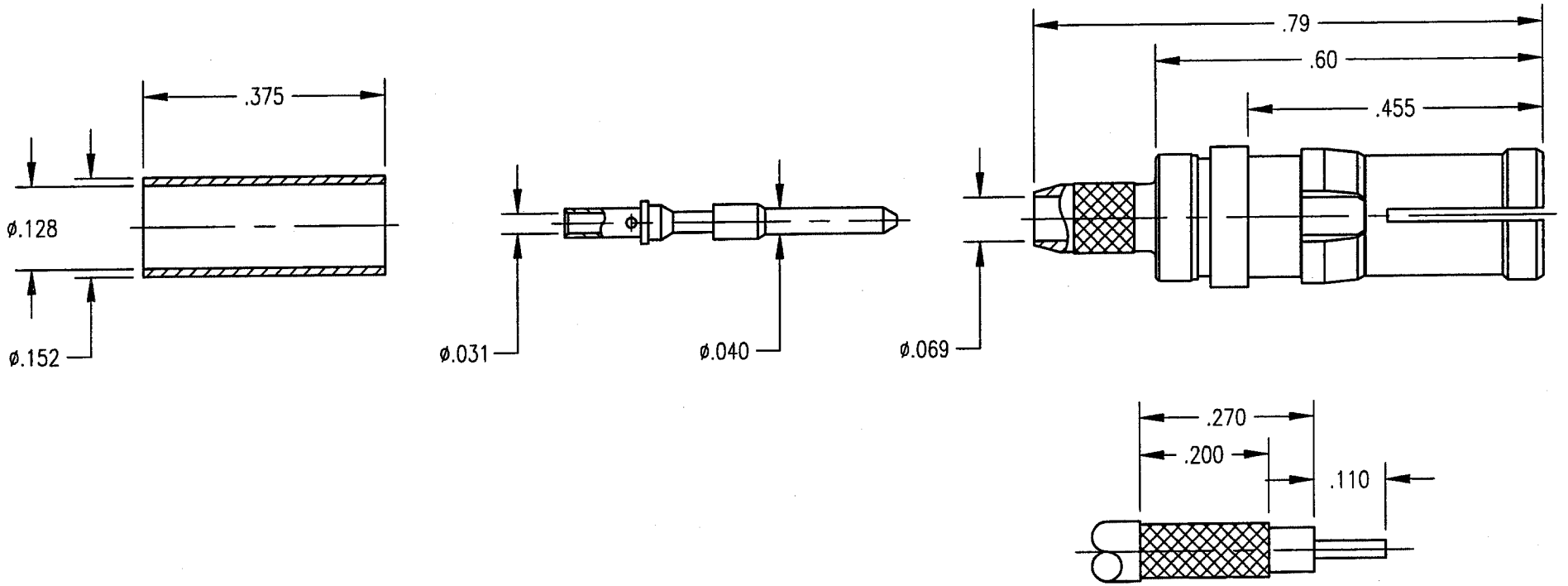

TRIMMING DIMENSIONS

NOTES:

1. MATERIALS:
   - FRONT BODY: BERYLLIUM COPPER PER ASTM B196
   - CLIP RING: BERYLLIUM COPPER PER ASTM B194
   - INSULATOR: TEFLON PER ASTM D1710
   - ALL OTHER METAL PARTS: BRASS PER ASTM B16
2. FINISH:
   - BODIES AND CONTACT: .000015 MIN. GOLD PER MIL-G-45204 OVER .000050 MIN. NICKEL PER QQ-N-290
   - CLIP RING: .000100 MIN. NICKEL PER QQ-N-290 OVER COPPER FLASH
   - FERRULE: .000100 TIN PER MIL-T-10727 OVER COPPER FLASH
3. FOR USE WITH RG-316 CABLE OR EQUIVALENT.
4. FOR CABLING PROCEDURES USE CAP 9-07 WITH ABOVE TRIMMING DIMENSIONS.
5. CRIMP FERRULE USING .128 HEX DIE.

PER ASME Y14.5M-1994
UNLESS OTHERWISE SPECIFIED:
DIMENSIONS ARE IN INCHES OR MM OR INCHES/MM
TOLERANCES:
DECIMALS .XX ± .01/0.254
.XXX ± .005/0.127
ANGLES ± 2°
SCALE: 4:1

CUSTOMER DRAWING

DRAWN	DATE	CHECKED	DATE
JWH	5/19/00	JED	5/19/00
APPROVED	DATE	APPROVED	DATE
JMC	5/19/00	JHT	5/19/00

Litton
Winchester Electronics/RETCONN
400 Park Road
Watertown, Connecticut 06795

TITLE
RDM CRIMP/CRIMP RECEPTCLE WITH CAPTIVE CENTER CONTACT

		SHT.	OF	REV.
A	261-910-0632C	1	1	A

June 2006 - This drawing became the property of Winchester Electronics Corporation, Wallingford, CT.