2.54mm (.100") Pitch DIN 41612/IEC 603-2 Connector

85042 Female Style C/2

FEATURES AND SPECIFICATIONS

Features and Benefits
- Dual opposing beam contact
- Performance levels 1 and 2
- Flux-proof option
- Board lock option
- Solder tails for 1.6mm (.062") and 3.2mm (.125") PCBs

Reference Information
Product Specification: PS-85042-0001
Packaging: Tray
UL File No.: E29179
CSA File No.: LR19980-390
Mates With:
85003—Right angle male style C/2
85013—Straight male style R/2

Electrical
Current: 1.5A
Contact Resistance: 20mΩ max.

Mechanical
Mating Force: 0.93N max.

Physical
Housing: Glass-filled polyester, UL 94V-0
Contact: Copper Alloy
Operating Temperature: -55 to +125°C

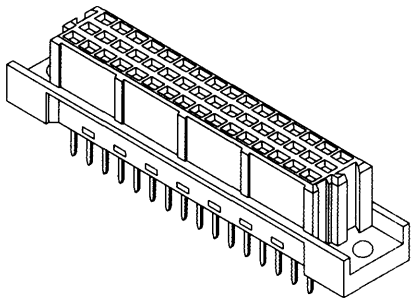

CATALOG DRAWING (FOR REFERENCE ONLY)

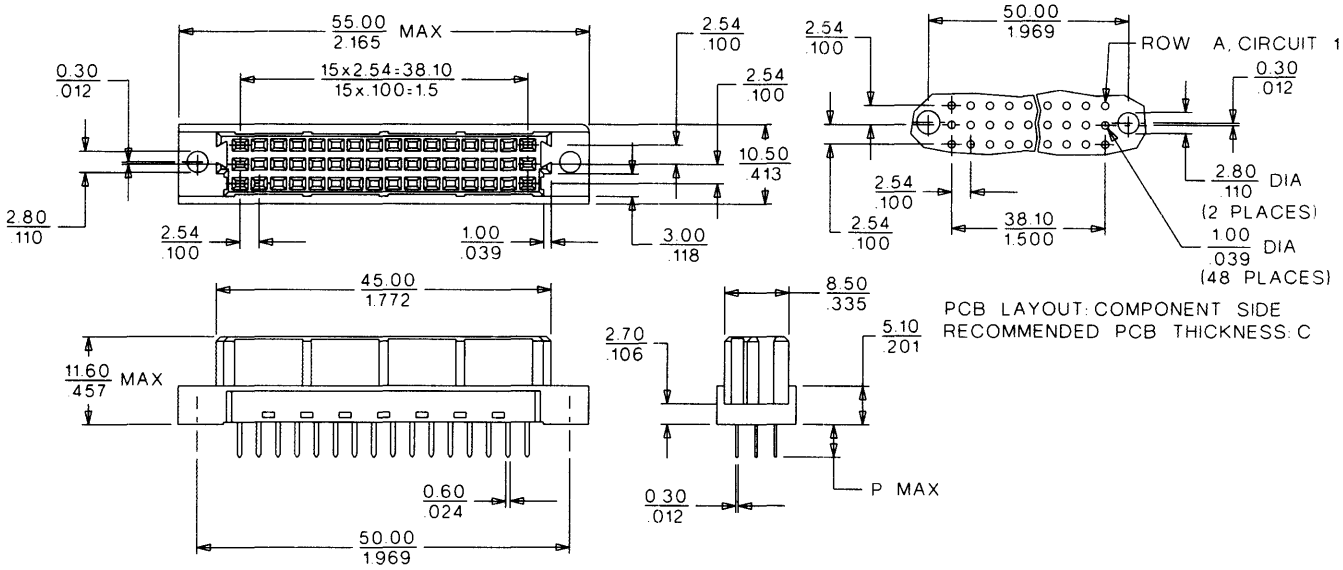

ORDERING INFORMATION AND DIMENSIONS

Circuits	Order No. Performance Level* 1	Order No. Performance Level* 2	Contact Loading	Rows	Solder Tail Dimension P	Option(s)
16		85042-6139	Even only	a, c	4.5 (.177)	
32		85042-0074	Full	a, c	2.9 (.114)	
		85042-2361				Flux proof
		85042-0048			4.5 (.177)	
		85042-0050				Flux proof
48		85042-4268	Full	a, b, c	2.9 (.114)	
		85042-1184				Flux proof
	85042-1330	85042-0086			4.5 (.177)	
		85042-0957				Flux proof

For other versions contact Molex
* Performance levels based on test conditions per DIN 41612, part 5:
1: >500 mating cycles. 10 day industrial environment (S02)
2: >400 mating cycles. 4 day industrial environment (S02)