Major League Electronics .079 cl Terminal Strip Headers - Right Angle

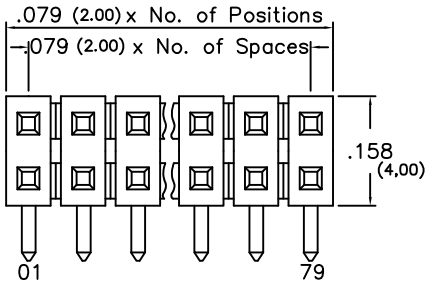

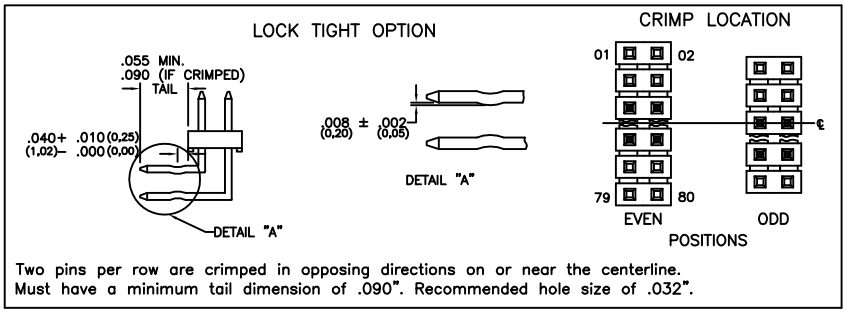

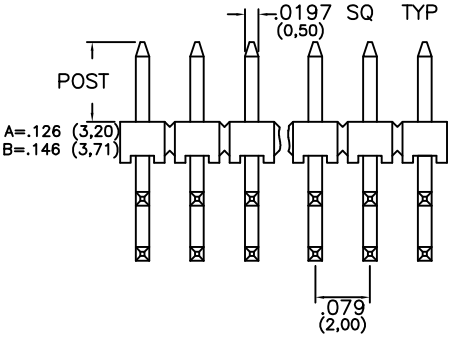

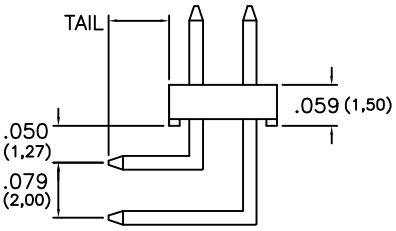

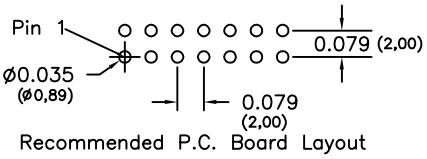

Tails may be clipped to achieve desired pin length

Ordering Information

TSHR-2 [XX] – [D] – [XX] – [X] – [XX] – [XX] – [XXX] – [X] – [LF]

- Pins Per Row: 01 - 40
- Row Specification: D = Dual Row
- Post Height: A = .126 (3.20); B = .146 (3.71)
- Plating Options (XX): see table below
- Lock Tight "LT" Option (XX): Leave blank if not needed; LT = With
- Polarized Position (XXX): Leave blank if not needed; If required, specify empty pin position, e.g. 012 for Pin 12
- Every Other Pin Filled (X): Leave blank if not needed; E = Filled
- Lead Free (LF)

Pin Options				
Tail With .126 Post		Tail With .146 Post		
.120	3.05mm	.100	2.54mm	01
.140	3.56mm	.120	3.05mm	02
.160	4.06mm	.140	3.56mm	04
.199	5.05mm	.179	4.55mm	05
.298	7.57mm	.278	7.06mm	06
.318	8.08mm	.298	7.57mm	08
.337	8.56mm	.317	8.05mm	10

	Plating Options
G	10µ Gold on Contact Area / Flash on Tail
T	Matte Tin All Over
GT	10µ Gold on Contact Area / Matte Tin on Tail
H	30µ Gold on Contact Area / Matte Tin on Tail
F	Gold Flash over Entire Pin

Specifications
Current Rating: 3.0 Ampere
Insulation Resistance: 1000MΩ Min.
Dielectric Withstanding: 500V AC
Contact Resistance: 20 mΩ Max.
Operating Temperature: -40°C to + 105°C
Max. Process Temperature:
- Peak: 260°C up to 10 secs.
- Process: 230°C up to 60 secs.
- Wave: 260°C up to 6 secs.
- Manual Solder: 350°C up to 5 secs.

Materials
Contact Material: Phosphor Bronze
Insulator Material: Nylon 6T
Plating: Au or Sn over 50µ" (1,27) Ni

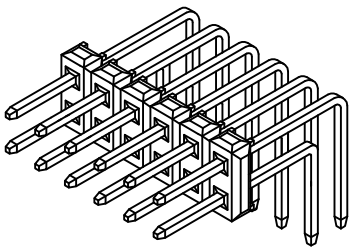

Mates with:
BCSS,
BSSH,
BSSHC,
BSSQ,
BSSQC,
BSSQM,
LSMBC,
LSSHSM,
SMBC,
SSHQ,
SSHQR,
SSHR,
SSHS,
SSHSM,
ULSMBC

Products cut to specific sizes are uncancellable/nonreturnable | Parts are subject to change without notice

TSHR-2-D SERIES	.079cl Dual Row - Right Angle Terminal Strip Headers	20 FEB 07	Scale NTS

UNLESS OTHERWISE SPECIFIED DIMENSIONS IN INCHES (MM) TOLERANCES ARE:
ONE PLACE DECIMALS ±.100
TWO PLACE DECIMALS ±.010
THREE PLACE DECIMALS ±.005
FOUR PLACE DECIMALS ±.0020
ANGLES ±5°

4235 Earnings Way, New Albany, Indiana, 47150, USA
1-800-782-3486 (USA/Canada/Mexico)
Tel: 812-944-7244
Fax: 812-944-7268
E-mail: mle@mlelectronics.com
Web: www.mlelectronics.com

Edition 1

Sheet 1/1