0.30 INCH SINGLE DIGIT
NUMERIC DISPLAYS

Series	Model No.	Material	Color	C.C. or C.A.
TOS-3101Ax	TOS-3101AR	GaAsP/GaP	RED	Common Cathode
	TOS-3101AH	GaAsP/GaP	H-RED(EFF)	
	TOS-3101AG	GaP	GREEN	
	TOS-3101AY	GaAsP/GaP	YELLOW	
	TOS-3101AE	GaAsP/GaP	ORANGE	
TOS-3101Bx	TOS-3101BR	GaAsP/GaP	RED	Common Anode
	TOS-3101BH	GaAsP/GaP	H-RED(EFF)	
	TOS-3101BG	GaP	GREEN	
	TOS-3101BY	GaAsP/GaP	YELLOW	
	TOS-3101BE	GaAsP/GaP	ORANGE	
TOS-3102Zx	TOS-3102ZR	GaAsP/GaP	RED	———
	TOS-3102ZH	GaAsP/GaP	H-RED(EFF)	
	TOS-3102ZG	GaP	GREEN	
	TOS-3102ZY	GaAsP/GaP	YELLOW	
	TOS-3102ZE	GaAsP/GaP	ORANGE	

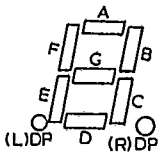

TOS-3101xx

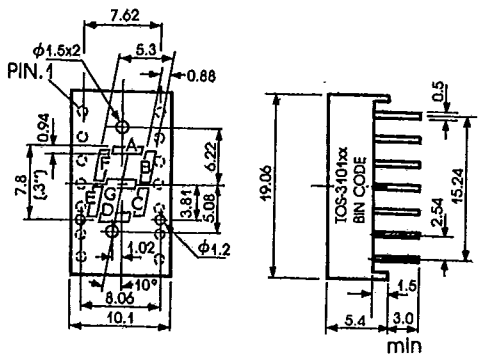

TOS-3101Ax

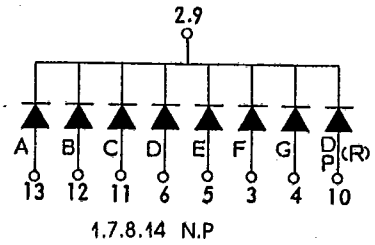

TOS-3101Bx

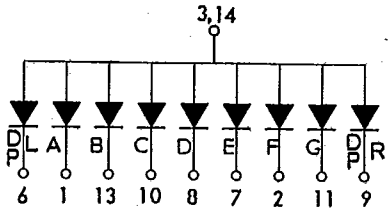

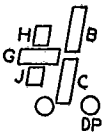

TOS-3102xx

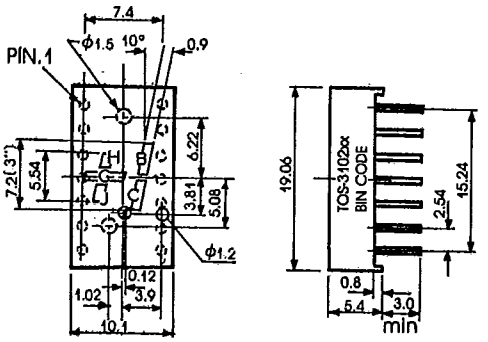

TOS-3102Zx

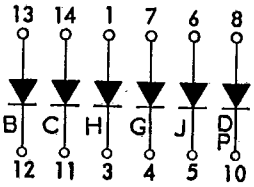

TAIWAN OASIS ENTERPRISE CO., LTD.
李洲企業股份有限公司
11 FL., NO.306 Sec 4, Hsin Yi Road
Taipei, Taiwan. R.O.C.
Telex:22943 TOASIS
Tel:(02)7066258,7060164
Fax:(02)7036939