Major League Electronics .079 cl Thicker Terminal Strip Headers - Standard

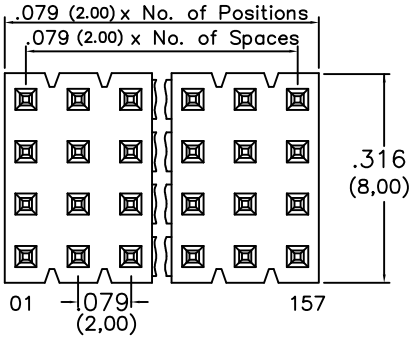

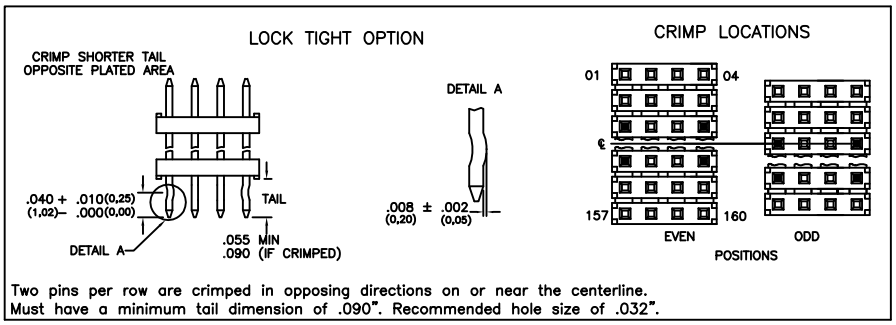

Two pins per row are crimped in opposing directions on or near the centerline.
Must have a minimum tail dimension of .090". Recommended hole size of .032".

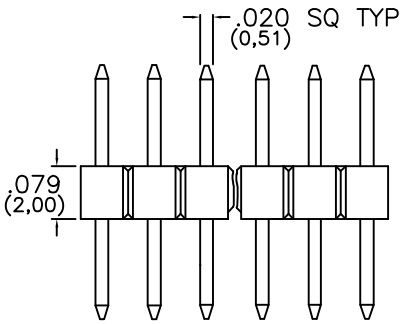

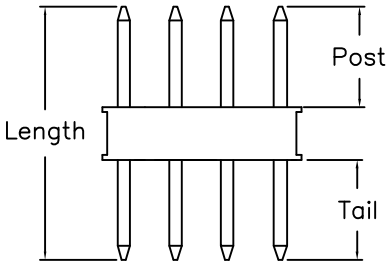

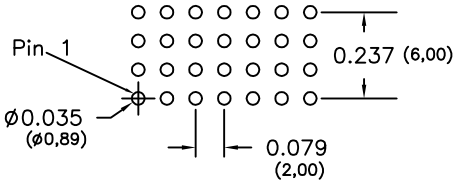

Recommended P.C. Board Layout

Tails may be clipped to achieve desired pin length

Ordering Information

TTSHS-2 XX – Q – XX – XX – XX – XXX – LF

- Pins Per Row: 01 - 40
- Row Specification: Q = Quad Row
- Lead Free
- Polarized Position: Leave blank if not needed. If required, specify empty pin position, e.g. 012 for Pin 12
- Lock Tight "LT" Option: Leave blank if not needed. LT = With

Pin Options				
Length		Post Height		
.234	5.94mm	.065	1.65mm	02
.255	6.45mm	.075	1.91mm	04
.302	7.67mm	.126	3.20mm	06
.323	8.20mm	.146	3.71mm	08

	Plating Options
G	10µ Gold on Contact Area / Flash on Tail
T	Matte Tin All Over
GT	10µ Gold on Contact Area / Matte Tin on Tail
H	30µ Gold on Contact Area / Matte Tin on Tail
F	Gold Flash over Entire Pin

Specifications
Current Rating: 3.0 Ampere
Insulation Resistance: 1000MΩ Min.
Dielectric Withstanding: 500V AC
Contact Resistance: 20 mΩ Max.
Operating Temperature: -40°C to + 105°C
Max. Process Temperature:
- Peak: 260°C up to 10 secs.
- Process: 230°C up to 60 secs.
- Wave: 260°C up to 6 secs.
- Manual Solder: 350°C up to 5 secs.

Materials
Contact Material: Phosphor Bronze
Insulator Material: Nylon 6T
Plating: Au or Sn over 50µ" (1,27) Ni

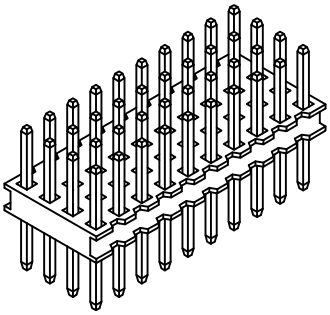

Mates with:
BSSH,
BSSHC,
BSSQ,
BSSQC,
BSSQM,
LSMBC,
SSHQ,
SSHQR,
SSHR,
SSHS,
SSHSM

Products cut to specific sizes are uncancellable/nonreturnable

Parts are subject to change without notice

TTSHS-2-Q SERIES	.079cl Quad Row - Standard Thicker Terminal Strip Headers	21 FEB 07	Scale NTS

UNLESS OTHERWISE SPECIFIED DIMENSIONS IN INCHES (MM) TOLERANCES ARE:
ONE PLACE DECIMALS ±.100
TWO PLACE DECIMALS ±.010
THREE PLACE DECIMALS ±.005
FOUR PLACE DECIMALS ±.0020
ANGLES ±5°

Major League ELECTRONICS

4235 Earnings Way, New Albany, Indiana, 47150, USA
1-800-782-3486 (USA/Canada/Mexico)
Tel: 812-944-7244
Fax: 812-944-7268
E-mail: mle@mlelectronics.com
Web: www.mlelectronics.com

Edition 1

Sheet 1/1