# Major League Electronics .079 cl Socket Strips - Right Angle using .020" sq pins

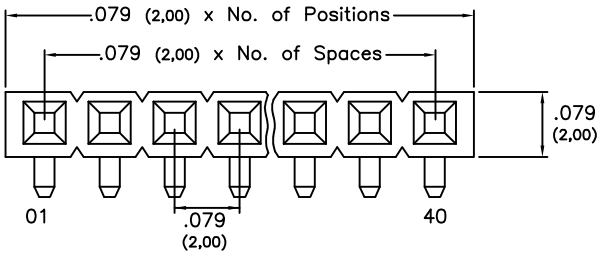


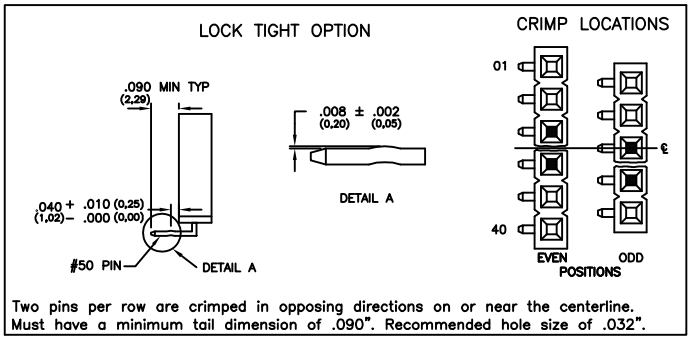


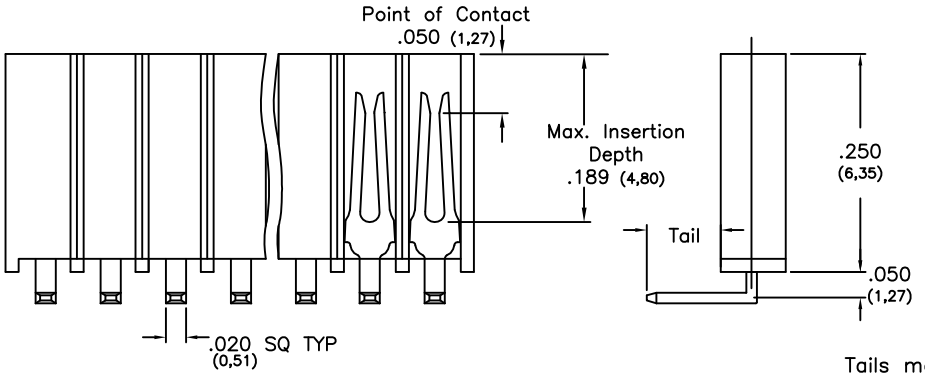


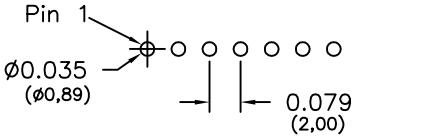


Recommended P.C. Board Layout

Tails may be clipped to achieve desired pin length

## Ordering Information

SSHQR-2 [XX] – [S] – [XX] – [XX] – [XX] – [XXX] – [LF]

- Pins Per Row: 01 - 40
- Row Specification: S = Single Row
- Pin Options
- Plating Options
- Lock Tight "LT" Option: Leave blank if not needed; LT = With
- Polarized Position: Leave blank if not needed; If required, specify empty pin position, e.g. 012 for Pin 12
- Lead Free

| Pin Options | | |
|---|---|---|
| Tail | | |
| .090 | 2.29mm | 02 |
| .248 | 6.30mm | 04 |
| .406 | 10.31mm | 06 |

| | Plating Options |
|---|---|
| G | 10µ Gold on Contact Area / Flash on Tail |
| T | Matte Tin All Over |
| GT | 10µ Gold on Contact Area / Matte Tin on Tail |
| H | 30µ Gold on Contact Area / Matte Tin on Tail |
| F | Gold Flash over Entire Pin |

Mates with:
BSTC,
BSTCM,
BSTCR,
BSTCRSM,
BSTS,
TBSTC,
TBSTCM,
TBSTS,
TBSTCM,
TBSTS,
TSHC,
TSHCR,
TSHCRE,
TSHCRSM,
TSHR,
TSHRE,
TSHS,
TSHSCM,
TTSHC,
TTSHCR,
TTSHCRE,
TTSHR,
TTSHRE,
TTSHS,
TTSHSM

Specifications
Insertion Force - Single Contact only - H Plating:
4oz. (1,11N) avg with .079 (2,00mm) sq. pin
Withdrawal Force - Single Contact only - H Plating:
3oz. (0,83N) avg with .079 (2,00mm) sq. pin
Current Rating: 2.0 Ampere
Insulation Resistance: 1000MΩ Min.
Dielectric Withstanding: 500V AC
Contact Resistance: 10 mΩ Max.
Operating Temperature: -40°C to + 105°C
Max. Process Temperature:
Peak: 260°C up to 10 secs.
Process: 230°C up to 60 secs.
Wave: 260°C up to 6 secs.
Manual Solder: 350°C up to 5 secs.

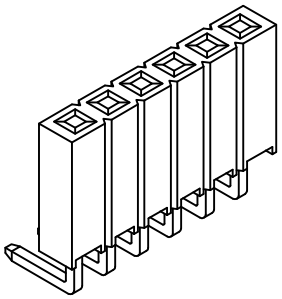

Materials
Contact Material: Phosphor Bronze
Insulator Material: Nylon 6T
Plating: Au or Sn over 50µ" (1,27) Ni

Products cut to specific sizes are uncancellable/nonreturnable

Parts are subject to change without notice

| SSHQR-2-S SERIES | .079cl SIngle Row - Right Angle Socket Strips using .020" sq pins | 19 FEB 07 | Scale NTS |
|---|---|---|---|

UNLESS OTHERWISE SPECIFIED DIMENSIONS IN INCHES (MM) TOLERANCES ARE:
ONE PLACE DECIMALS ±.100
TWO PLACE DECIMALS ±.010
THREE PLACE DECIMALS ±.005
FOUR PLACE DECIMALS ±.0020
ANGLES ±5°


Major League ELECTRONICS
4235 Earnings Way, New Albany, Indiana, 47150, USA
1-800-782-3486 (USA/Canada/Mexico)
Tel: 812-944-7244
Fax: 812-944-7268
E-mail: mle@mlelectronics.com
Web: www.mlelectronics.com


Edition 1

Sheet 1/1