PRODUCT NO.
SEE TABLE

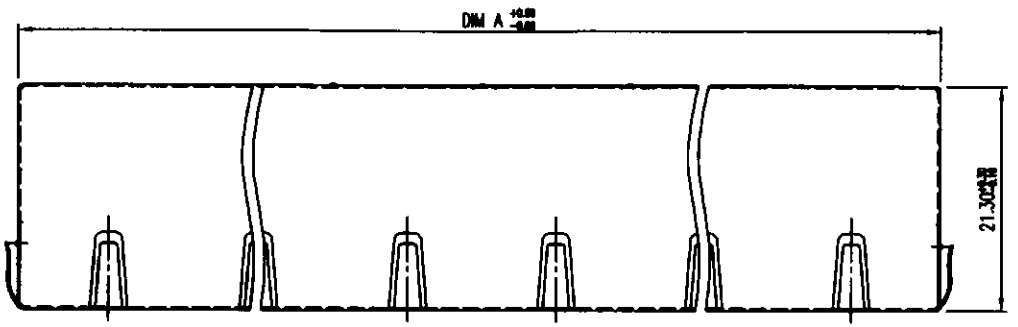

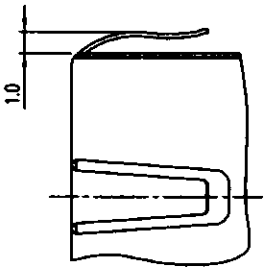

VIEW C
SCALE : 4/1
TYP FOR ALL GROUND SPRINGS

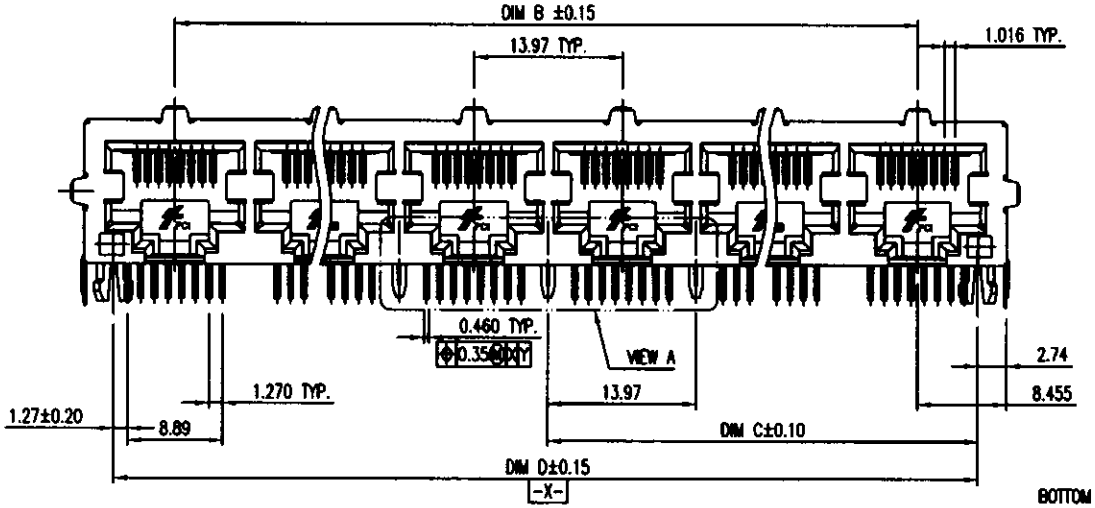

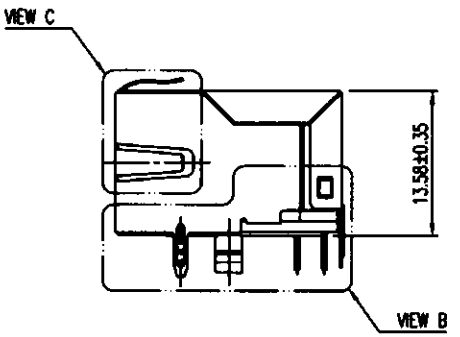

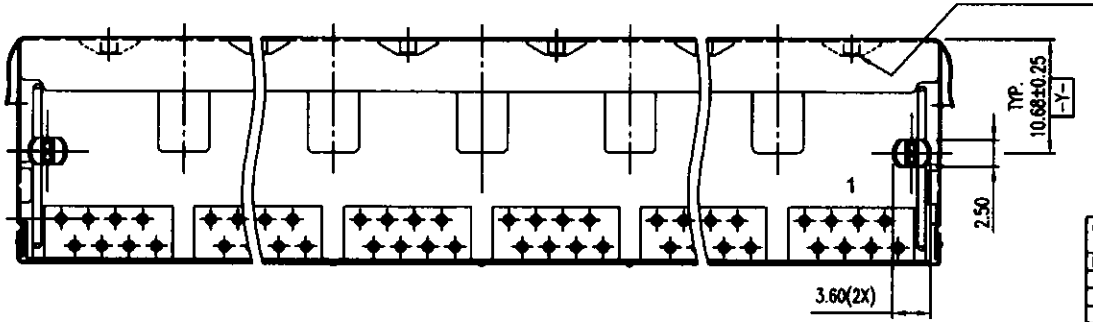

mat'l. code				tolerances unless otherwise specified		CUSTOMER COPY	Electronics FCI www.fciconnect.com
ltr	ecn no	dr	date	linear	.X ±.25		
A	T050035	JBR	5/31/00		.XX ±.15	projection	title R/A 8 POS GANG JACK SHALLOW LATCH
B	T150071	W L	08/25/01		.XXX ±.05		
				angles	0° ±2°		
				dr A. JIANG	6/15/99	mm	product family GANG JACK / code -
				engr TONY CHEN	6/15/99		
				chr TONY CHEN	6/15/99	scale 2:1	size A3 / dwg no 52340 / sheet 1 of 5
				appd JOHN TSAO	6/15/99		
sheet	revision	B	A	B	A A		
index	sheet	1	2	3	4 5		cage code 22526

form no. 7530-001-103

All rights strictly reserved. Reproduction or issue to third parties in any form whatever is not permitted without written authority from the proprietor.
Property of © FCI ELECTRONICS
Copyright FCI ELECTRONICS INC.

Tous droits strictement reserves. Reproduction ou communication a des tiers interdite sous quelque forme que ce soit sans autorisation ecrite du proprietaire.
Propriete de © FCI ELECTRONICS.
Droits de reproduction FCI ELECTRONICS INC.

PDM: Rev:B STATUS:Released Printed: Oct 26, 2005

PRODUCT NO.
SEE TABLE

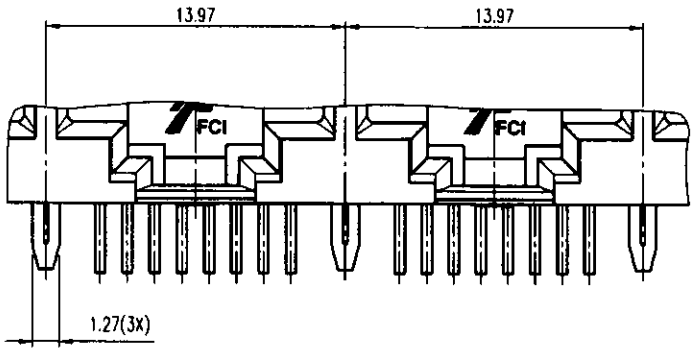

FOR PORT NO. 4,6,8

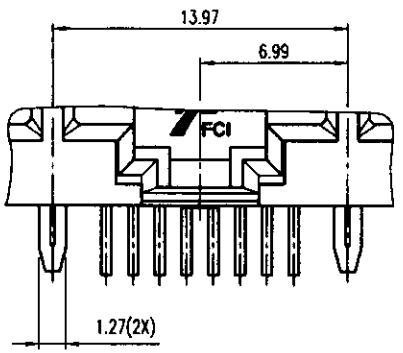

FOR PORT NO. 3,5,7

VIEW A

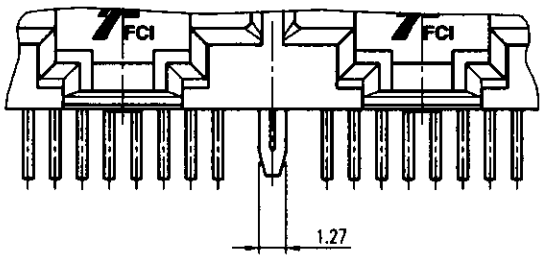

FOR 2-PORT

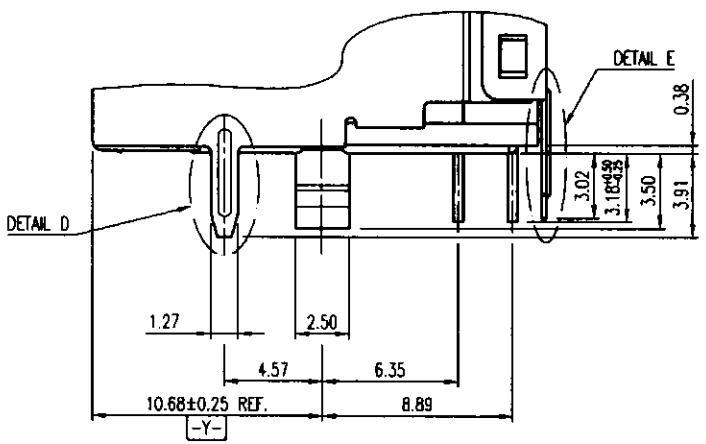

VIEW B

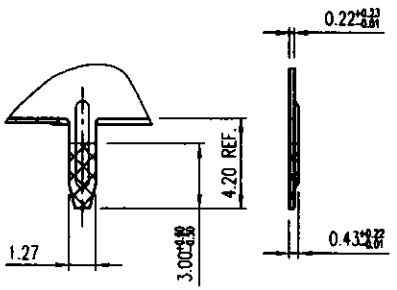

DETAIL D
SIDE PEGS

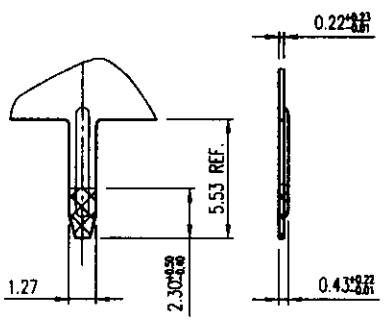

DETAIL E
REAR PEGS

POST SOLDER DIP AREA

mat'l. code				tolerances unless otherwise specified			CUSTOMER COPY	Electronics FCI www.fciconnect.com
ltr	ecn no	dr	date	linear	.X ±.25			
A					.XX ±.15		projection	title R/A 8 POS GANG JACK SHALLOW LATCH
					.XXX ±.05			
				angles	0° ±2°			
				dr	A. JUANG	6/15/99	mm	product family GANG JACK / code –
				engr	TONY CHIEN	6/15/99		
				chr	TONY CHIEN	6/15/99	scale 4:1	size A3 / dwg no 52340 / sheet 2 of
				appd	JENN TSAO	6/15/99		
sheet index	revision sheet							

cage code 22526

form no. 7530-001-103

Tous droits strictement reserves. Reproduction ou communication a des tiers interdite sous quelque forme que ce soit sans autorisation ecrite du propietaire. Droits de reproduction FCI ELECTRONICS INC. Propriete de © FCI ELECTRONICS.

All rights strictly reserved. Reproduction or issue to third parties in any form whatever is not permitted without written authority from the proprietor. Copyright FCI ELECTRONICS INC. Property of © FCI ELECTRONICS

PDM: Rev:B STATUS:Released Printed: Oct 26, 2005

PRODUCT NO.	NO. OF PORTS	DIM A	DIM B	DIM C	DIM D	DIM E	REMARKS
52340-X02YZ	2	30.88	13.97	12.70	25.40	31.48	NOT AVAILABLE
52340-X03YZ	3	44.85	27.94	19.69	39.37	45.45	NOT AVAILABLE
52340-X04YZ	4	58.82	41.91	26.67	53.34	59.42	AVAILABLE
52340-X05YZ	5	72.79	55.88	33.66	67.31	73.39	NOT AVAILABLE
52340-X06YZ	6	86.76	69.85	40.64	81.28	87.36	NOT AVAILABLE
52340-X07YZ	7	100.73	83.82	47.63	95.25	101.33	NOT AVAILABLE
52340-X08YZ	8	114.70	97.79	54.61	109.22	115.30	NOT AVAILABLE

SOLDER OPTION Z	SPECIFICATIONS
0	WITHOUT POST SOLDER DIP ON GROUND LUGS
1	WITH POST SOLDER DIP ON GROUND LUGS (SEE DETAIL D, E)

SPRING OPTION Y	DESCRIPTIONS (NOTE 5)	REMARKS
0	NO SPRING	TOOLED
1	SPRINGS ON TOP AND BOTH SIDES	TOOLED
2	SPRINGS ON TOP AS 88692	NOT TOOLED

PLATING CODE X	PLATING
0	30u" G.X.T.
1	15u" GOLD
4	15u" G.X.T.
6	6u" GOLD
7	GOLD FLASH

NOTES:
1. HOUSING MAT'L: HIGH TEMP. THERMOPLASTIC, COLOR BLACK. UL94V-0.
2. CONTACT MAT'L: COPPER ALLOY.
3. CONTACT PLATING: SEE TABLE.
4. SHIELDING MAT'L: NICKEL PLATED BRASS ALLOY, 0.20 MM THICK.
5. SEE SHEET 4 FOR GROUND SPRINGS CONFIGURATION.
6. STANDARD PACKAGING: USING TUBE.

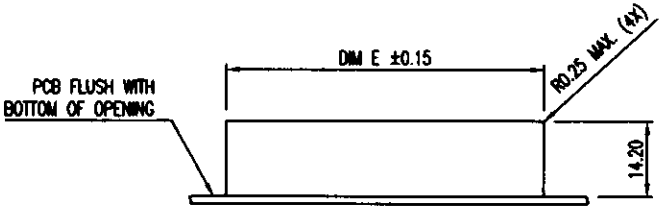

RECOMMENDED PANEL-CUT

mat'l. code	tolerances unless otherwise specified	CUSTOMER COPY	FCI Electronics www.fciconnect.com
ltr / ecn no / dr / date	linear .X ±.25, .XX ±.15, .XXX ±.05; angles 0° ±2°	projection	title R/A 8 POS GANG JACK SHALLOW LATCH
	dr A. JUANG 6/15/99; engr TONY CHIEN 6/15/99; chr TONY CHIEN 6/15/99; appd JENN TSAO 6/15/99	mm	product family GANG JACK; code –
		scale 1:1	size A3; dwg no 52340; sheet 3 of
sheet index / revision sheet			cage code 22526

form no. 7530-001-103

Tous droits strictement reserves. Reproduction ou communication a des tiers interdite sous quelque forme que ce soit sans autorisation ecrite du propietaire. Droits de reproduction FCI ELECTRONICS INC. Propriete de © FCI ELECTRONICS.

All rights strictly reserved. Reproduction or issue to third parties in any form whatever is not permitted without written authority from the proprietor. Copyright FCI ELECTRONICS INC. Property of © FCI ELECTRONICS

PDM: Rev:B STATUS Released Printed: Oct 26, 2005

PRODUCT NO.
SEE TABLE

GROUND SPRINGS CONFIGURATION

OPTION Y

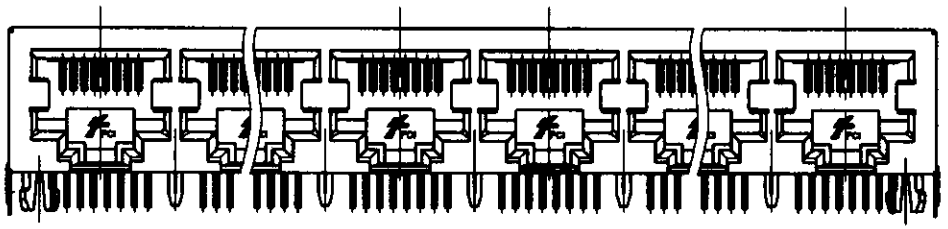

SPRING OPTION 0

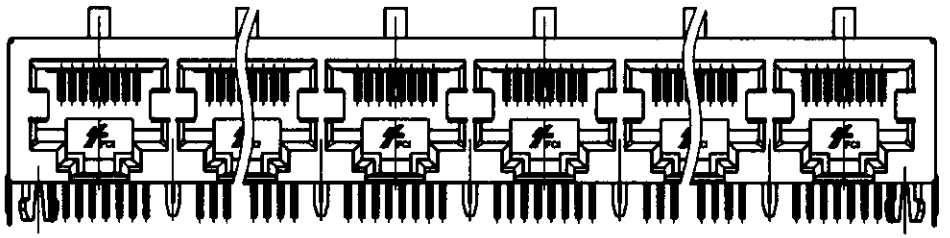

SPRING OPTION 2

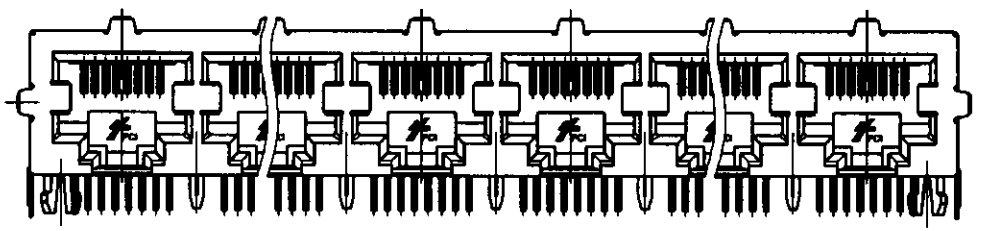

SPRING OPTION 1

Tous droits strictement reserves. Reproduction ou communication a des tiers interdite sous quelque forme que ce soit sans autorisation ecrite du propietaire. Droits de reproduction FCI ELECTRONICS INC. Propriete de © FCI ELECTRONICS.

All rights strictly reserved. Reproduction or issue to third parties in any form whatever is not permitted without written authority from the proprietor. Copyright FCI ELECTRONICS INC. Property of © FCI ELECTRONICS

PDM: Rev:B STATUS Released Printed: Oct 26, 2005

mat'l. code				tolerances unless otherwise specified			CUSTOMER COPY	Electronics FCI www.ficonnect.com
ltr	ecn no	dr	date	linear	.X ±.25			
A					.XX ±.15		projection	title R/A 8 POS GANG JACK SHALLOW LATCH
					.XXX ±.05			
				angles	0° ±2°			
				dr	A. JIANG	6/15/'99	mm	product family GANG JACK / code —
				engr	TONY CHEN	6/15/'99		
				chr	TONY CHEN	6/15/'99	scale 2:1	size A3 / dwg no 52340 / sheet 4 of
				appd	JENN TSAO	6/15/'99		
sheet index	revision sheet							

form no. 7530-001-103

cage code 22526

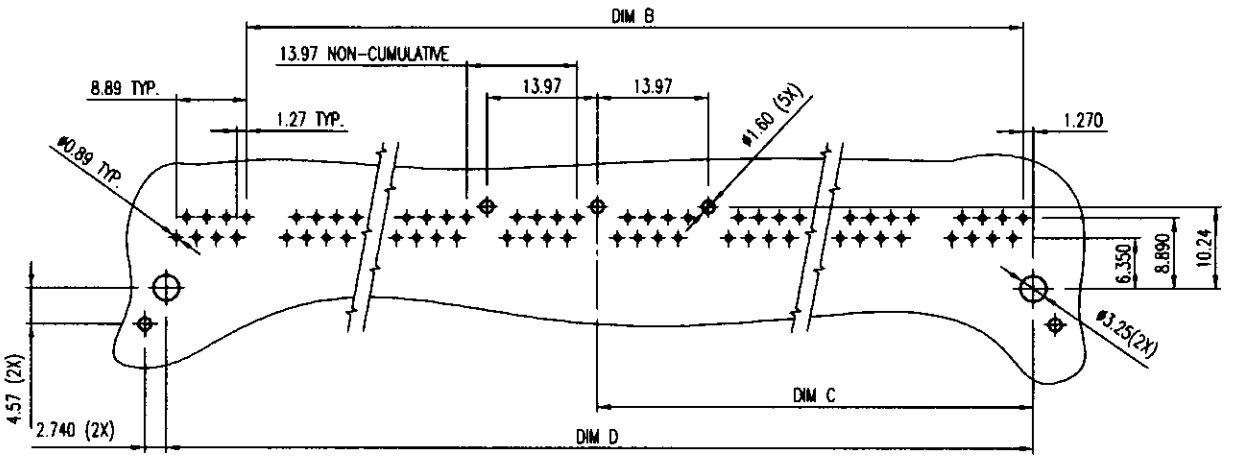

PORT NO. 4,6,8

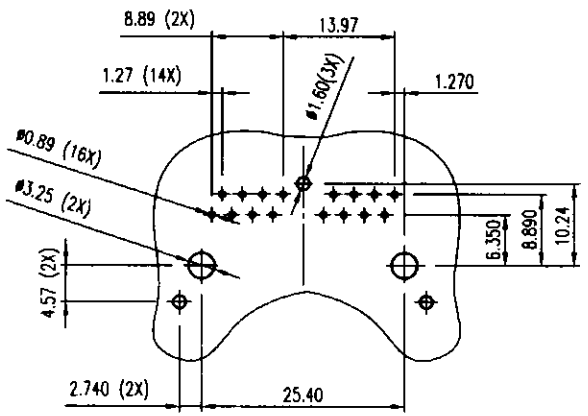

2-PORT

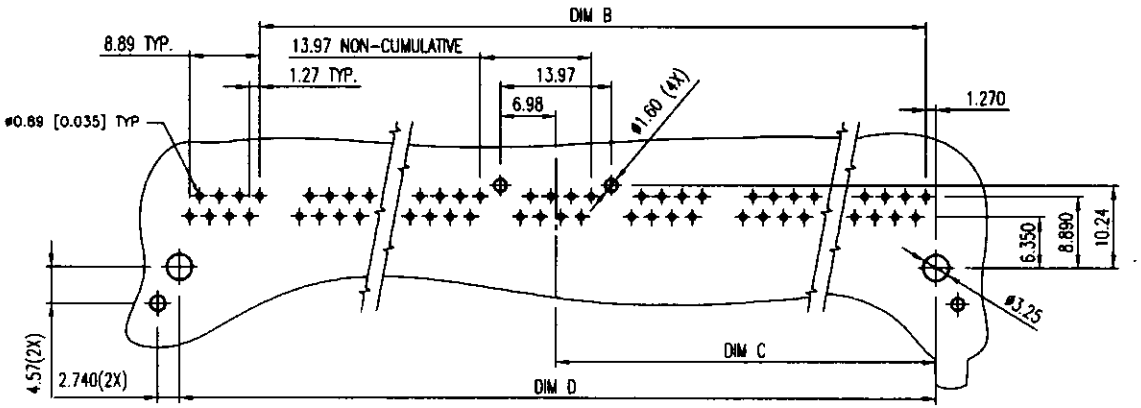

PORT NO. 3,5,7

RECOMMENDED P.C.B LAYOUT

mat'l. code				tolerances unless otherwise specified			CUSTOMER COPY	Electronics FCI www.fciconnect.com
ltr	ecn no	dr	date	linear	.X ±.25		projection	title R/A 8 POS GANG JACK SHALLOW LATCH
A					.XX ±.15			
					.XXX ±.05			
				angles	0° ±2°			
				dr	A. JUANG	6/15/'99	mm	product family GANG JACK
				engr	TONY CHIEN	6/15/'99		size A3 dwg no 52340
				chr	TONY CHIEN	6/15/'99	scale 1:1	sheet 5 of 5
				appd	JENN TSAO	6/15/'99		
sheet index	revision sheet							

cage code 22526

form no. 7530-001-103

Tous droits strictement reserves. Reproduction ou communication a des tiers interdite sous quelque forme que ce soit sans autorisation ecrite du propietaire. Droits de reproduction FCI ELECTRONICS INC. Propriete de © FCI ELECTRONICS.

All rights strictly reserved. Reproduction or issue to third parties in any form whatever is not permitted without written authority from the proprietor. Copyright FCI ELECTRONICS INC. Property of © FCI ELECTRONICS

PDM: Rev:B STATUS Released Printed: Oct 26, 2005